New air for the future.

Browse the catalogue →

PRODUCT CATALOGUE

2022

RHOSS

NIBE GROUP MEMBER

RHOSS

NIBE GROUP MEMBER

RHOSS

NIBE GROUP MEMBER

General index

Introduction

The company and the group

Vision and Mission

Our certifications

Product overview

Product range

Chillers | Heat pumps

Heat pumps for DHW

EXP - Multi-purpose systems

Condensing units

System accessories

Fan coils

Terminal units
and heat recovery units

Air Handling Units

Management, control
and monitoring systems

Tools

Rhoss Solutions

New air for the future.

Air is inseparably linked to our well-being: we say we wish for a change of air when we are looking for something new, we go out for a breath of fresh air to clear our minds and we take a deep breath each time we are about to make an important decision.

We at Rhoss are experts, and since 1968, we have been committed to bringing new, air-conditioned, regenerated and clean air to public and private spaces in order to increase the perceptionof being in place that is welcoming, enjoyable to stay and good to live in.

We do so by designing air conditioning and treatment systems that always put people's needs first through a conscious approach, which identifies comfort as the virtuous combination of research, technology, quality and energy efficiency.

RHOSS

NIBE GROUP MEMBER

NIBE

In 2019, we became part of the NIBE Group, historic player in the high-end eco-friendly Climate Solutions sector. Born in Sweden, a country at the forefront of environmental and social sustainability issues, NIBE is recognized around the world for its attention to the reduction of gas emissions and a better use of energy, in addition to its forward-looking value code, which over time has generated a strong business culture and a sense of belonging for its more than 15,000 employees. Including us.

Becoming part of this international group has given us new energy to grow in research and development and technology, renewing our enthusiasm and commitment for the challenges of tomorrow. Because yes, our future is in the air.

Climate comfort, everywhere.

With this perspective, our solutions - chillers, heat pumps, multi-purpose systems, fan coils and air handling units - fully meet the requirements of the most modern Green Buildings, which have now become the international standard and essential for those operating in our sector.

We design systems for air conditioning and air treatment, always focusing on people's needs and well-being without compromising on the sustainability and energy efficiency of the systems.

RHOSS

NIBE GROUP MEMBER

Ranging from residential to commercial, we have developed a greater know-how in the creation of complete and customisable systems for the Hospitality, Hospital & Medical, Schools and Office Building sectors: buildings designed to accommodate people, workers or technologies, where it is essential to ensure performance and reliability both in the design stage and the one following installation.

We bring climate solutions at the top, where the air is pure.

The Rhoss R&D laboratory, with its climatic rooms, **constitutes the engineering and technological peak of our company.** There we put our skills to the test each day to always push ourselves a little higher, where the air is pure. We wish to continuously refine the tools at our disposal to create that comfort born from the belief that the environment can only improve if we do so ourselves.

Our design philosophy is based on one basic fundamental concept: testing the behaviour of the machines manufactured in all environmental conditions in which they may be used, from the most critical environmental ones up to the maximum power loads.

This assumption makes us a reliable partner for designers who turn to us, to whom we provide advice and the certainty that each component and system will be optimised to deliver energy performance suitable to the geographical area, the building and its intended use.

RHOSS

NIBE GROUP MEMBER

Air comfort specialists to optimize the efficiency of buildings.

Thanks to experience spanning **over 50 years** in the sector, we are able to achieve a clear overview of the project, from the initial to the final after-sales steps. Always starting from analysing the desired goals, we can identify the most suitable technologies to be applied to products and systems, and customise them down to the smallest detail to meet any need of our customers.

Rhoss' numbers

At all times, installers and designers can count on the advice of our technical and sales team to obtain the most competitive conditions in terms of consumption, efficiency and return on investment and to receive support in the installation and testing stages.

+50

years of experience in the sector

69

Countries where Rhoss HVAC systems have been installed in the last year

50000

square meters of production with dedicated lines and an R&D laboratory that places Rhoss at the top of the sector in terms of quality

RHOSS
NIBE GROUP MEMBER

A conscious choice for a sustainable future.

Efficiency, technology, ecology. The three key words for a sustainable future.

Rhoss has always been careful to create comfort, and invests and studies new solutions to be applied to equipment dedicated to the HVAC world: efficiency and technology are firm points in the development of new products in order to make them more and more compatible with the environment that we live in.

The progressive elimination of fluorinated refrigerants (HFCs), established by the new EU regulation, provides for a gradual reduction of the quantities placed on the market, expressed as the equivalent in tons of CO2. This should lead to a 79% reduction in HFC consumption by 2030.

79%

CO2 reduction thanks to the elimination in HFCs.

Reference volume (100%) corresponding to the annual average of the equivalent total amount of CO_2 introduced into the EU from 2009 to 2012.

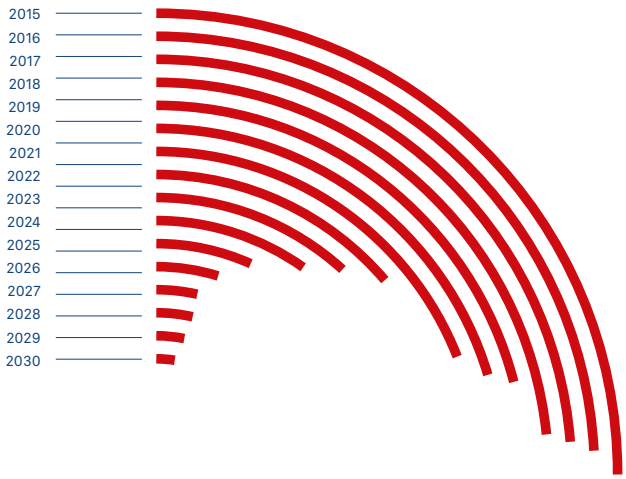

The application of this legislation will lead to the introduction and increasingly massive use of new low-GWP (Global Warming Potential) gases, consistent with the evolution of technology.
In fact, in the world market of refrigerants, depending on what technology is used, there are many solutions that allow for a reduction in GWP, with respect to gases traditionally used in the HVAC sector.

Refrigerants and the relative Global Warming Potential

LOW GLOBAL WARMING POTENTIAL

Low GWP

The following table indicates some examples of refrigerant gases and related GWP.

Refrigerants	GWP	Low GWP
R407C	1774	
R134a	1430	
R410A	2088	
R513A	631	✔
R452B	698	✔
R1234ze	7	✔
R32	675	✔
R454B	466	✔
R515B	293	✔

Rhoss has long started this process of harmonisation with the new "green"gases, testing and experimenting with new solutions, without precluding any possibility.
Furthermore, all the ranges in the catalogue that Rhoss provides solutions for with low GWP refrigerant are distinguished by a specific mark.
The gradual phase-down of high GWP refrigerants is also accompanied by the demand for increasingly efficient and low-consumption products as required by the European Ecodesign Directive. This provides the specifications for an environmentally friendly design of all energy-using products and through Regulations 813/2013 and 2016/2281 it imposed minimum seasonal winter (SCOP) and summer (SEER) efficiency requirements for the introduction of chillers and heat pumps on the European market. The product performance tables, therefore, indicate the SEER and SCOP indexes, in line with the requirements of the directive.

RHOSS
NIBE GROUP MEMBER

All our certifications

ISO 9001:2015 Certification

RHOSS Spa provides quality goods designed for environmental comfort, making them available and accessible thanks to the advanced technological and organisational level achieved, and, above all, to the committed, reliable and dedicated approach that RHOSS personnel take to their job every day. The organisation and operations of the business are based on a Quality Management System. The Quality System currently implemented with the new ISO 9001-2015 version has rules and practices established and agreed with the entire Organisation.

ISO 14001:2015 Certification

RHOSS Spa supplies quality goods designed for environmental comfort. With the same commitment, it pays attention to environmental issues, considering correct management and efficient control of its environmental aspects of prime importance, engaging in Environmental Protection and in full compliance with the standards in force and with specific requirements. For this reason, Management has decided to implement an environmental certification system, based on the requirements of the international standard UNI EN ISO 14001, applying it to all the activities carried out within the company and especially to its production activities.

EUROVENT Certification for CHILLERS, HEAT PUMPS and FAN COILS

Rhoss participates in Eurovent certification programs for chillers, heat pumps, polyvalent units and fan coils.
The performances of Rhoss products are guaranteed by tests carried out by a third party credited certification body.

EUROVENT Certification for AIR HANDLING UNITS

Rhoss participates in the certification programme for air handling units with the ADV and NEXTAIR range which includes performance certification according to standard EN 13053; the certification of mechanical features according to EN1886; and the energy classification of the machines.

LEED certification - Leadership in Energy & Environmental Design

Rhoss participates in the LEED building certification protocol. The international system is based on the whole building's life cycle from design and construction, to management and maintenance.

Features

CHILLERS - HEAT PUMPS

AIR-COOLED - AXIAL FANS

Features	Page	Webcode	Type of refrigerant	Cooling only	Heat pump	Inverter	Compressor	Cooling capacity (kW)	Heating capacity (kW)	RANGE: 0 ÷ 17,5 kW	17,5 ÷ 100 kW	101 ÷ 350 kW	351 ÷ 500 kW	501 ÷ 700 kW	701 ÷ 900 kW	901 ÷ 1200 kW	> 1201 kW
Electa-ECO	30	EE001	R32		●	●	Rotary	4÷13 kW	6÷15,5 kW								
Electa-ECOS-B	32	EESB1	R32		●	●	Rotary	3,2÷6,5 kW	4÷9,5 kW								
Electa-ECOS.2-B NEW	34	EESB2	R32		●	●	Rotary	11,3÷11,6 kW	14,5÷16,1 kW								
Electa-ECOS-T	36	EEST1	R32		●	●	Rotary	3,1÷6,5 kW	4÷9,5 kW	Capacity DHW: 185 l							
Electa-SAN Plus Electa-SAN NEW	38	ESW02 ESW01	R134a		●		Rotary			DHW capacity: 200-300 L							
MidiPACK-I	40	CYI02	R410A	●	●	●	Scroll	18,8÷29,3 kW	20÷30,4 kW								
MidiPACK-I ECO	42	MDI12	R32	●	●	●	Scroll	29,5÷55,2 kW	32,4÷58,8 kW								
MidiPACK-I	44	CYI12	R410A	●	●	●	Scroll	37,4÷62,6 kW	40,2÷71 kW								
EasyPACK-I	46	EAI01	R410A	●	●	●	Scroll	67,1÷130,4 kW	71,2÷134,6 kW								
Compact-Y NF Plus	48	CYP11	R410A		●		Scroll	15,5÷26,6 kW	16,6÷30,4 kW								
Compact-Y SM	50	CY031	R410A		●		Scroll	22,7÷29 kW	23,5÷34 kW								
Compact-Y MD	52	CY011	R410A	●	●		Scroll	32,3÷64,6 kW	37,8÷68,3 kW								
POKER	54	PK001	R410A		●		Scroll	28,8÷115,2 kW	33,8÷135,2 kW								
EasyPACK ECO	56	EAS02	R32	●	●		Scroll	69,4÷153,7 kW	75,2÷152,3 kW								
EasyPACK	58	EAS01	R410A	●	●		Scroll	63,7÷144,4 kW	70,3÷151,7 kW								
WinPACK ECO NEW	62	WKE12	R32	●	●		Scroll	147,7÷356,6 kW	159,3÷347,4 kW								
WinPACK HE-A	64	WKE11	R410A	●	●		Scroll	91,6÷345 kW	110,5÷357 kW								
WinPACK SE	68	WK011	R410A	●	●		Scroll	97,6÷328,6 kW	109,5÷354,6 kW								
WinPACK-R HE-A	74	WKE21	R410A	●			Scroll	221,4÷372 kW									
WinPACK-R SE	76	WK021	R410A	●			Scroll	214,2÷345, 7 kW									
Y-Pack FREECOOLING	78	YKF11	R410A	●			Scroll	170÷361 kW									

Key

Rotary compressor	Screw compressor	Scroll compressor	Centrifugal compressor

Features

		Page	Webcode	Type of refrigerant	Cooling only	Heat pump	Inverter	Compressor	Cooling capacity (kW)	Heating capacity (kW)	RANGE 0 ÷ 17,5 kW	17,5 ÷ 100 kW	101 ÷ 350 kW	351 ÷ 500 kW	501 ÷ 700 kW	701 ÷ 900 kW	901 ÷ 1200 kW	> 1201 kW
CHILLERS - HEAT PUMPS																		
AIR-COOLED - AXIAL FANS																		
WinPOWER ECO NEW		80	WPE05 WPE15	R454B	●	●			349,7÷910,5 kW	368,3÷654,5 kW								
WinPOWER HE-A		84	WPE11	R410A	●	●			354,2÷916,8 kW	383,3÷698,9 kW								
WinPOWER SE		90	WP011	R410A	●				359,8÷861,8 kW									
FullPOWER EVO VFD NEW		94	FPV33 FPV31	R134a R513A	●		●		550,4÷1504,1 kW									
FullPOWER EVO VFD (1+i) NEW		96	FPV43 FPV41	R134a R513A	●		●		548,4÷1510,1kW									
FullPOWER EVO NEW		98	FPE23 FP023 FPE21 FP021	R134a R513A	●				336,6÷1564,1 kW									
Z-Power FREECOOLING		104	ZPF01	R134a	●				469÷1216 kW									
TurboPOWER ECO		108	TP014	R1234 ze	●				323,2÷948,6 kW									
TurboPOWER		110	TP011	R134a	●				267÷1101 kW									
AIR-COOLED - CENTRIFUGAL FANS																		
Compact-ID		112	CID01	R410A	●	●	●		16,4÷27,5 kW	17,7÷28,5 kW								
Y-Pack C-PF		114	YKC11	R410A	●	●			32,3÷160,2 kW	37,7÷175,6 kW								
WATER-COOLED																		
Comby-Flow		118	CF001	R410A		●			5,3÷11,9 kW	6,6÷13,7 kW								
Y-Flow		120	YF051	R410A	●	●			15,5÷41,7 kW	17,4÷45,1 kW								
Y-Flow		122	YF021 YF031	R410A	●	●			41,2÷373,9 kW	50,2÷464,4 kW								
FullFLOW ECO VFD (1+i)		126	FFE04	R1234 ze	●		●		285,6÷1217,2 kW									
FullFLOW VFD (1+i)		128	FFE03	R513A	●		●		389,5÷1701,1 kW									
FullFLOW DX		130	FFD03	R513A	●				201,7÷1455,2kW									
CONDENSERLESS UNITS																		
Y-Flow E		132	YFC41	R410A	●				13,7÷36,9 kW									
Y-Flow E		134	YFC21 YFC31	R410A	●				39,8÷320,9 kW									
Z-Flow E		136	ZFC01	R134a	●				171,9÷1424,8 kW									

Features

Features		Page	Webcode	Type of refrigerant	Cooling only	EXP system	Inverter	Compressor	Cooling capacity (kW)	Heating capacity (kW)	RANGE 0 ÷ 17,5 kW	17,5 ÷ 100 kW	101 ÷ 350 kW	351 ÷ 500 kW	501 ÷ 700 kW	701 ÷ 900 kW	901 ÷ 1200 kW	> 1201 kW
EXP - Multi-purpose systems																		
AIR-COOLED - AXIAL FANS																		
EasyPACK-I EXP		140	EAX01	R410A		•	•		64,4÷125,9 kW	71÷133,2 kW								
Compact-Y EXP MD		142	CYX21	R410A		•			33,8÷61,6 kW	39,4÷68,3 kW								
EasyPACK ECO EXP		144	EAX05	R454B		•			67,2÷133,8 kW	71÷136,9 kW								
WinPACK ECO EXP		146	WKX15	R454B		•			135,7÷333,6 kW	44,3÷351,4 kW								
WinPACK EXP		148	WKX11	R410A		•			137,7÷339,6 kW	150,3÷372,4 kW								
WinPOWER ECO EXP		150	WPX05	R454B		•			352,7÷641,5 kW	363,3÷645,5 kW								
WinPOWER EXP		152	WPX01	R410A		•			379,1÷654,8 kW	420,9÷706,2 kW								
CONDENSATI AD ACQUA																		
Comby-Flow EXP		154	CFX01	R410A		•			5,5÷12,2 kW	6,4÷13,7 kW								
Y-Flow EXP		156	YFX21 YFX31	R410A		•			44,2÷397,1 kW	49,3÷459,3 kW								
Condensing units																		
MCAEBY 115÷130		162	CUY01	R410A	•				16,4÷31,5 kW									
MCAEBY 233÷2160		164	CUY11	R410A	•				34,5÷162,6 kW									
System accessories																		
REMOTE CONDENSERS																		
CCAMY 115÷2185		166	CRYA1 CRYA2	R410A														
PUMPING AND TANK UNITS																		
AS 0300÷2500		170	GPA01															
BOILERS FOR DOMESTIC HOT WATER																		
KACS		172	ACCBL								Capacity DHW: 200-300-500 L							
THERMAL FLYWHEEL																		
KSI		174	ACCSB								Capacity: 25-50-100-200 L							

Legenda

Rotary compressor	Screw compressor	Scroll compressor	Centrifugal compressor

Features

		Page	Webcode	Type of refrigerant	Cooling only	Heat pump	Inverter	Compressor	Cooling capacity (kW)	Heating capacity (kW)	RANGE 0 ÷ 5 kW	6 ÷ 10 kW	11 ÷ 15 kW	16 ÷ 20 kW	21 ÷ 25 kW	26 ÷ 30 kW	31 ÷ 35 kW	> 36 kW
Fan coils																		
FLOOR, CEILING, RECESSED WALL OR FALSE CEILING INSTALLATION																		
BRIO-I SLIM		178	BRIS1				●		1÷4 kW	1,4÷5,5 kW								
COVER for BRIO-I SLIM		180	BRIS1						1÷4 kW	1,1÷4,6 kW								
YARDY-I EV3		182	YARI3				●		1,9÷8,4 kW	2,5÷11,8 kW								
YARDY EV3		184	YARV3						1÷8,3 kW	1,4÷11,7 kW								
COVER for YARDY		188	YARV3 YARI3				●		1,8÷4,8 kW	2,3÷5,8 kW								
DUCTED INSTALLATION																		
YARDY-ID2		192	YAID2				●		3÷6,3 kW	3,9÷8,7 kW								
YARDY-DUCT2		194	YADC2						1,9÷5,7 kW	2,4÷7,2 kW								
YARDY-HP		196	YAHP1						7÷19,8 kW	9,9÷29,6 kW								
FALSE CEILING BOXES																		
DIVA-I		198	DIVI1				●		2,7÷10,7 kW	3,4÷12,7 kW								
DIVA-XLI DIVA-XLI SWING		200	DIXI1 DIXS1				●		12,6÷15,1 kW	13,4÷16,4 kW								
DIVA		202	DIVA1						1,9÷10,9 kW	2,6÷14 kW								
WALL MOUNTING INSTALLATION																		
IDROWALL-I **IDROWALL-I/V3** NEW		204	IDRO2 IDRO1				●		2,2÷4,3 kW	2,4÷5,1 kW								
CONTROLS FOR FAN COILS																		
SLIM-Touch		206	ACREG															
LIT-Touch		210	ACREG															
Standard controls		215	ACREG															

Features		Page	Webcode	Type of refrigerant	Cooling only	Heat pump	Inverter	Compressor	Cooling capacity (kW)	Heating capacity (kW)	RANGE
Terminal units and heat recovery units											
TERMINAL UNITS											
UTNA Platinum		218	UTAP1			•		6,4÷70 kW	4,9÷78 kW		
HEAT RECOVERY UNITS											
UTNR-A Platinum		220	UTNR3			•					Air flow rate: 400÷4.700 m³/h
UTNR-HE Platinum		224	UTHE3			•					Air flow rate: 310÷4.250 m³/h
UTNR-HP		226	UTHP1	R410A		•	◉				Air flow rate: 350÷4.500 m³/h
Electa-REK		228	ERK01	R410A		•	◉				Air flow rate: 200 - 300 - 150/450 m³/h
VMC-E		230	VMC01			•					Air flow rate: 250÷1.300 m³/h
CONTROLS FOR TERMINAL UNITS											
Full CONTROLS		232	VMC01								
Air Handling Units											
MODULAR AIR HANDLING UNITS											
ADV Next Air 01-16		238	NA001								Air flow rate: 800÷41.000 m³/h
CUSTOM AIR HANDLING UNITS											
ADV Custom 240÷22920		242	CTCT								Air flow rate: 850÷104.970 m³/h
POOL DEHUMIDIFIERS											
Dry-Pool		246	DP001 DOM01								Dehumidification capacity: 8-140 l/h

		Page	Webcode
Management, control and monitoring systems			
SYS-TO **System Touch Manager & Web APP**	**Integrated system management**	254	SUVIS
MTM **Multi Technology Manager**	**Chiller management software**	258	MTM01
SIR **Rhoss Integrated Sequencer**	**Chiller management software**	264	SIR01
RHOSS MONITORING: Mobile - Cloud - Real time	**Remote monitoring**	266	MON01
RHOSS WEB SERVER	**Control and monitoring via ETHERNET**	268	WBS01
Tools			
UP TO DATE - Product selection software		272	
Dry pool - Product selection software		276	
CTA ADV CUSTOM E NEXT AIR - Product selection software		278	
Rhoss Solutions			
INDOOR AIR QUALITY SOLUTIONS			
Air Suite		282	AIRST
Ponente 1000 NEW		286	
VARIABLE FLOW RATE SYSTEMS SOLUTIONS			
VPF **Variable Primary Flow**		290	

Heat pumps for DHW

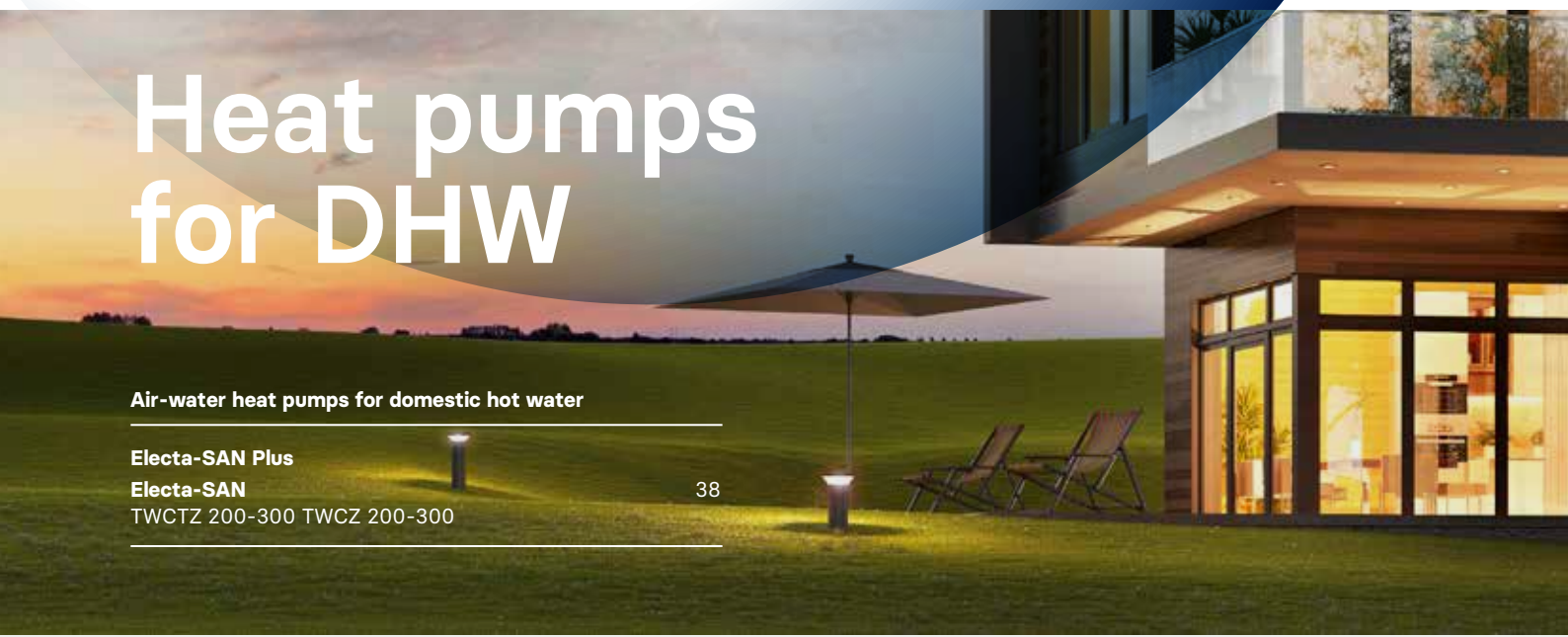

Air-water heat pumps for domestic hot water

Electa-SAN Plus
Electa-SAN 38
TWCTZ 200-300 TWCZ 200-300

Chillers
Heat pumps

Air-cooled - Axial fans | Inverter with scroll technology

Electa-ECO 30
THAITI 106÷116

Electa-ECOS-B 32
MHAITI 104÷110 + IUB 06-10

Electa-ECOS.2-B 34
MHAITI 114-116 +IUB 16

Electa-ECOS-T 36
MHAITI 104÷110 + IUT 06-10

MidiPACK-I 40
TCAITY-THAITY 120÷130

MidiPACK-I ECO 42
TCAITI-THAITI 131÷155

MidiPACK-I 44
TCAITY-THAITY 138÷262

EasyPACK-I 46
TCAIY-THAIY 270÷2130

Air-cooled - Axial fans | Hermetic with scroll technology

Compact-Y NF Plus 48
THAETY 115÷127 NF

Compact-Y SM 50
THAEY 122÷130

Compact-Y MD 52
TCAEY 238÷265
THAEY 233÷265

POKER 54
THAETY 234 H.T.

EasyPACK ECO 56
TCAEI-THAEI 270÷2150

EasyPACK 58
TCAEY-THAEY 269÷2146

WinPACK ECO 62
TCAEI-THAEI 2160÷4350

WinPACK HE-A 64
TCAEY-THAEY 2110÷4340

WinPACK SE 68
TCAEY-THAEY 2110÷4340

WinPACK-R HE-A 74
TCAETY-TCAEQY 4235÷4370

WinPACK-R SE 76
TCAEBY-TCAESY 4225÷4345

Y-Pack FREECOOLING 78
TFAEY-TGAEY 4160÷4320

WinPOWER ECO 80
TCAEU 4370÷8910 / THAEU 4370÷6660

WinPOWER HE-A 84
TCAEY 4385÷8920 / THAEY 4385÷6700

WinPOWER SE 90
TCAEY 4360÷8860

Air-cooled - Axial fans | Inverter with screw

FullPOWER EVO VFD 94
TCAIT-TCAIQ 2565÷21495

FullPOWER EVO VFD (1+i) 96
TCAIT-TCAIQ 2560÷21500

Air-cooled - Axial fans | Semi-hermetic with screw

FullPOWER EVO 98
TCAVB 2335÷21505
TCAVT-TCAVQ 2345÷21565

Z-Power FREECOOLING 104
TFAVBZ - TFAVIZ - TFAVSZ 2420÷21100

Air-cooled - Axial fans |
Oil-free Centrifugal compressors

TurboPOWER ECO 108
TCATTE-TCATQE 1330÷3950

TurboPOWER 110
TCATBZ-TCATTZ 1300÷31100 / TCATQZ 1300÷3990

Air-cooled - Centrifugal fans | Inverter with scroll technology

Compact-ID 112
TCCITY-THCITY 117÷128

Air-cooled - Centrifugal fans | Hermetic with scroll technology

Y-Pack C-PF 114
TCCETY-THCETY 233÷2160

Water-cooled | Hermetic with scroll technology

Comby-Flow 118
THHEY 105÷112

Y-Flow 120
TCHEY-THHEY 115÷240

Y-Flow 122
TCHEY 245÷4360 / THHEY 245÷4410

Water-cooled | Inverter with screw

FullFLOW ECO VFD (1+i) 126
TCHITE 1280÷21220

FullFLOW VFD (1+i) 128
TCHITL 1390÷21700

Water-cooled | Semi-hermetic with screw

FullFLOW DX 130
TCHVTL 1200÷21450

Condenserless Units | Hermetic with scroll technology

Y-Flow E 132
TCEEY 115÷240

Y-Flow E 134
TCEEBY 245÷4360

Condenserless Units | Semi-hermetic with screw

Z-Flow E 136
TCEVZ 1200÷31630

NEW Web code: **EE001**

Electa-ECO

THAITI 106÷116

Cooling capacity:
4÷13 kW

Heating capacity:
6÷15,5 kW

Touch-screen control panel as standard

Electa-ECO THAITI 106-108

Electa-ECO THAITI 110-114-116

Packaged reversible air-cooled heat pumps with axial fans. Range with hermetic rotary DC Inverter compressors and R32 refrigerant gas.

KEY FEATURES

- **Low GWP R32 refrigerant**
- **Energy class A+++**
- **Temperature of the produced water up to 60°C**
- **Domestic hot water production from –25°C to +45°C outdoor air**
- **3-way diverter valve management for DHW**
- **Touch-screen control panel as standard**
- **APP for managing the unit via smartphone (iOS and Android)**
- **Accessory inertial tank under unit**

CONSTRUCTION FEATURES

- Compressor: hermetic, twin rotary DC Inverter with steam injection, complete with thermal protection and casing heater
- Expansion valve: electronic.
- Cooling circuit with economiser
- Water side heat exchanger: adequately insulated stainless steel plates, complete with antifreeze heater.
- Air side heat exchanger: finned coil with copper pipes and aluminium-manganese fins with Golden Fin anti-corrosion treatment in epoxy resin and hydrophilic treatment.
- Fan: axial type impeller with DC brushless motors, equipped with internal thermal protection, accident protection grilles and proportional electronic device for continuous fan rotation speed regulation.
- Structure: made of galvanised and painted steel plate RAL9002, complete with condensate drain pan and unit base antifreeze heater.
- Control: microprocessor electronic control with touch-screen control panel with remote control option, for integrated management of the heat pump and the heating system, according to the various requirements relating to the use of the energy sources.
  - 3-way diverter valve management for production of domestic hot water.
  - Rapid heating function for domestic hot water.
  - Anti-legionella cycle function, with activation timer.
  - Auxiliary or supplementary heat source management.
  - Operation in silent mode with timer.
  - Weekly and daily time bands.
  - Holiday mode and antifreeze function.
  - Power consumption limiting function.
  - 2-way on/off valve management for shutting off a part of the system, in heating or cooling mode.
  - Management through room thermostat, as an alternative to the touch-screen panel.
  - Unit activation from external contact (remote ON/OFF)
- Unit complete with:
  - Outdoor temperature probe for set-point compensation.
  - Remote ambient air temperature probe, for managing the unit according to the ambient set-point (10 m).
  - Water temperature probe for domestic hot water tank (20 m).
  - Water temperature probe for auxiliary or supplementary heat source (5 m).
  - Connection cable for touch-screen (8 m).
- RS485 interface for serial communication with other devices (Modbus RTU protocol).
- iOS and Android APP for managing the unit via smartphone and tablet.

MODELS

- THAITI: heat pump unit.

PUMP SET-UP

- Pump unit complete with: EC circulator, automatic air vent valve, safety valve, flow switch, expansion tank, water filter.

SEPARATELY SUPPLIED ACCESSORIES

KAI-70 - Inertial storage tank, with function of thermal flywheel or hydraulic separator, for outdoor installation below Electa-ECO unit; 30W leakage losses, energy class A.
KTAI - Connection pipe between Electa-ECO unit and KAI tank.
KVDEV - 3-way valve for the production of domestic hot water, managed by regulation.
KRIT - Supplementary electrical resistance.
KSA - Rubber anti-vibration mounts.
KPRT - 20 m touch-screen connection cable as an alternative to the cable supplied as standard.

Features

COOL HEAT · ROTARY COMPRESSOR · INVERTER · LOW GWP · GAS R32 · OUTDOOR · EUROVENT CERTIFIED PERFORMANCE www.eurovent-certification.com

	THAITI MODEL		106 M	108 M	110 M	112 M	114 M	116 M	116 T
❶	Heating capacity	kW	6	7,5	10	12	14	15,5	15,5
❶	Absorbed power	kW	1,58	2	2,7	3,48	4,18	4,7	4,7
❶	C.O.P.		3,8	3,75	3,7	3,45	3,35	3,3	3,3
❷	Heating capacity	kW	6	7,5	10	12	14	15,5	15,5
❷	Absorbed power	kW	1,2	1,63	2,17	2,64	3,22	3,6	3,6
❷	C.O.P.		5	4,6	4,61	4,55	4,35	4,31	4,3
❸	Cooling capacity	kW	4	5	7,8	9,5	12	13	13
❸	Absorbed power	kW	1,29	1,61	2,48	3,11	4,14	4,91	4,73
❸	E.E.R.		3,1	3,1	3,15	3,05	2,9	2,65	2,75
❹	Cooling capacity	kW	5,8	6,8	8,8	11	12,5	14,5	14,5
❹	Absorbed power	kW	1,35	1,58	1,96	2,56	3,05	3,85	3,82
❹	E.E.R.		4,3	4,3	4,49	4,3	4,1	3,77	3,8
❺	Sound pressure	dB(A)	38	39	43	43	44	46	46
❸	Available circulator head	kPa	69	66	77	54	50	42	42
	KAI Buffer tank water content	l	70	70	70	70	70	70	70
	Electrical supply	V-ph-Hz	230-1-50	230-1-50	230-1-50	230-1-50	230-1-50	230-1-50	400-3+N-50
	DIMENSIONS AND WEIGHTS		**106 M**	**108 M**	**110 M**	**112 M**	**114 M**	**116 M**	**116 T**
	L - THAITI Width	mm	1150	1150	1200	1200	1200	1200	1200
	H - THAITI Height	mm	758	758	878	878	878	878	878
	P - THAITI Depth	mm	345	345	460	460	460	460	460
❻	THAITI Weight	kg	109	109	166	166	166	166	166
	L - THAITI+KAI Width	mm	1240	1240	1240	1240	1240	1240	1240
	H - THAITI+KAI Height	mm	1165	1165	1285	1285	1285	1285	1285
	P - THAITI+KAI Depth	mm	460	460	460	460	460	460	460
❻	THAITI+KAI Empty Weight	kg	164	164	221	221	221	221	221

Data at the following conditions:
❶ Air: 7°C D.B. - 6°C W.B. - Water: 40/45°C.
❷ Air: 7°C D.B. - 6°C W.B. - Water: 30/35°C.
❸ Air: 35°C D.B. - Water: 12/7°C.
❹ Air: 35°C D.B. - Water: 23/18°C.
❺ In open field (Q = 2) at 5 m from the unit.
❻ Weight refers to the most complete set up.
Performance according to EN 14511

	SEASONAL ENERGY PERFORMANCE		106 M	108 M	110 M	112 M	114 M	116 M	116 T
	THAITI MODEL SEASONAL PERFORMANCE IN HEATING MODE - Low temperature application 35°C								
③	Pdesignh (EN 14825)	kW	5	6	9	11	11	13	13
③	SCOP (EN 14825)		4,7	4,65	4,48	4,5	4,28	4,18	4,18
④	η_s	%	185	183	176	177	168	164	164
④	Energy class		A+++	A+++	A+++	A+++	A++	A++	A++
	THAITI MODEL SEASONAL PERFORMANCE IN HEATING MODE - Medium temperature application 55°C								
③	Pdesignh (EN 14825)	kW	6	7	8	10	11	13	13
③	SCOP (EN 14825)		3,23	3,25	3,23	3,23	3,2	3,2	3,2
④	η_s	%	126	127	126	126	125	125	125
④	Energy class		A++	A++	A++	A++	A++	A++	A++

③ In Average climatic conditions.
④ Seasonal energy efficiency: ambient heating in Average climate (EU Regulations No.811/2013 and No.813/2013)

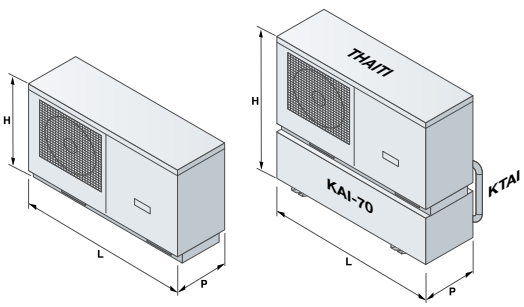

Electa-ECOS-B

MHAITI 104÷110 + IUB 06-10

Cooling capacity:
3,2÷6,5 kW

Heating capacity:
4÷9,5 kW

Two-section reversible air-water heat pumps. Range with hermetic rotary DC Inverter compressors and R32 refrigerant gas.

KEY FEATURES

- **Low GWP R32 refrigerant**
- **Energy class A+++**
- **Temperature of the produced water up to 60°C**
- **Domestic hot water production from –25°C to +45°C outdoor air**
- **Indoor unit complete with circulator, expansion tank, 3-way valve for DHW and electrical resistance.**
- **Touch-screen control panel.**
- **APP for managing the unit via smartphone (iOS and Android)**

CONSTRUCTION FEATURES

IUB INDOOR UNIT

Indoor unit for wall mounting installation:
- Structure: made of galvanised and painted steel plate.
- Water side heat exchanger: adequately insulated stainless steel plates, complete with antifreeze heater.
- Pump unit complete with: EC circulator, automatic air vent valve, safety valve, flow switch, expansion tank, pressure gauge, water filter.
- 3-way valve for the production of domestic hot water.
- Supplementary electrical resistance, system side.
- Control: microprocessor electronic control with touch-screen panel for integrated management of the heat pump and the heating system, according to the various requirements relating to the use of the energy sources:
  - 3-way diverter valve management for production of domestic hot water.
  - Rapid heating function for domestic hot water.
  - Anti-legionella cycle function, with activation timer.
  - Auxiliary or supplementary heat source management.
  - Operation in silent mode with timer.
  - Weekly and daily time bands.
  - Holiday mode and antifreeze function.
  - Power consumption limiting function.
  - 2-way on/off valve management for shutting off a part of the system, in heating or cooling mode.
  - Management through room thermostat, as an alternative to the touch-screen panel.
  - Unit activation from external contact (remote ON/OFF)
- Unit complete with:
  - Outdoor temperature probe for set-point compensation.
  - Remote ambient air temperature probe, for managing the unit according to the ambient set-point.
  - Water temperature probe for domestic hot water tank (20 m).
  - Communication cable between outdoor and indoor units.
- RS485 interface for serial communication with other devices (Modbus RTU protocol).
- iOS and Android APP for managing the unit via smartphone and tablet.

MHAITI OUTDOOR UNIT

- Compressor: hermetic, twin rotary DC Inverter with steam injection, complete with thermal protection and casing heater
- Expansion valve: electronic.
- Cooling circuit with economiser
- Air side heat exchanger: finned coil with copper pipes and aluminium-manganese fins with Golden Fin anti-corrosion treatment in epoxy resin and hydrophilic treatment, complete with protection grilles.
- Fan: axial type impeller with DC brushless motors, equipped with internal thermal protection, accident protection grilles and proportional electronic device for continuous fan rotation speed regulation.
- Structure: made of galvanised and painted steel plate RAL9002, complete with condensate drain pan and unit base antifreeze heater.

MODELS

MHAITI+USB: 2-section air-water heat pump.

SEPARATELY SUPPLIED ACCESSORIES

KSA - Rubber anti-vibration mounts.
KPRE - Wiring for RS485 serial connection to the touch-screen panel.

Features

COOL HEAT · COMPRESSOR ROTARY · INVERTER · LOW GWP · GAS R32 · SPLIT · EUROVENT CERTIFIED PERFORMANCE www.eurovent-certification.com

	MHAITI outdoor unit		104	106	108	110
	IUB indoor unit		**06**	**06**	**10**	**10**
❶	Heating capacity	kW	4	5,9	8	9,5
❶	Absorbed power	kW	1,02	1,51	2,14	2,64
❶	C.O.P.		3,92	3,91	3,74	3,6
❷	Heating capacity	kW	4	6	8	9,5
❷	Absorbed power	kW	0,78	1,2	1,7	2,07
❷	C.O.P.		5,13	5,00	4,71	4,59
❸	Cooling capacity	kW	3,2	4,1	5,3	6,5
❸	Absorbed power	kW	0,94	1,28	1,73	2,27
❸	E.E.R.		3,42	3,2	3,06	2,86
❹	Cooling capacity	kW	3,8	5,8	7,0	8,5
❹	Absorbed power	kW	0,82	1,32	1,75	2,24
❹	E.E.R.		4,63	4,40	4,00	3,79
❺	Sound pressure (external unit)	dB(A)	37	37	41	42
❸	Available circulator head	kPa	76	74	70	63
	Electrical supply	V-ph-Hz	230-1-50	230-1-50	230-1-50	230-1-50
	Internal unit electrical resistance	no. x kW	2 x 1,5	2 x 1,5	2 x 3,0	2 x 3,0
	Refrigeration lines max length/height difference	m / m	20 / 15	20 / 15	25 / 15	25 / 15
	MHAITI outdoor unit		**104**	**106**	**108**	**110**
	L - Width	mm	975	975	980	980
	H - Height	mm	702	702	788	788
	P - Depth	mm	396	396	427	427
	Weight	kg	55	55	82	82
	IUB indoor unit		**06**	**06**	**10**	**10**
	L - Width	mm	460	460	460	460
	H - Height	mm	860	860	860	860
	P - Depth	mm	315	315	315	315
	Weight	kg	62	62	62	62

Data at the following conditions:
❶ Air: 7°C D.B. - 6°C W.B. - Water: 40/45°C.
❷ Air: 7°C D.B. - 6°C W.B. - Water: 30/35°C.
❸ Air: 35°C D.B. - Water: 12/7°C.
❹ Air: 35°C D.B. - Water: 23/18°C.
❺ In open field (Q = 2) at 5 m from the unit.
❻ Weight refers to the most complete set up.
Performance according to EN 14511

	ENERGY PERFORMANCE	MHAITI	104	106	108	110
		IUB	**06**	**06**	**10**	**10**
	AMBIENT HEATING - Low temperature application 35°C					
③	Pdesignh (EN 14825)	kW	5	6	7	9
③	SCOP (EN 14825)		4,66	4,54	4,60	4,60
④	η_s	%	184	179	181	181
④	Energy class		A+++	A+++	A+++	A+++
	AMBIENT HEATING - Average application temperature 55°C					
③	Pdesignh (EN 14825)	kW	5	5	7	8
③	SCOP (EN 14825)		3,27	3,25	3,31	3,25
④	η_s	%	128	127	129	127
④	Energy class		A++	A++	A++	A++

③ In Average climatic conditions.
④ Seasonal energy efficiency: ambient heating in Average climate (EU Regulations No.811/2013 and No.813/2013)

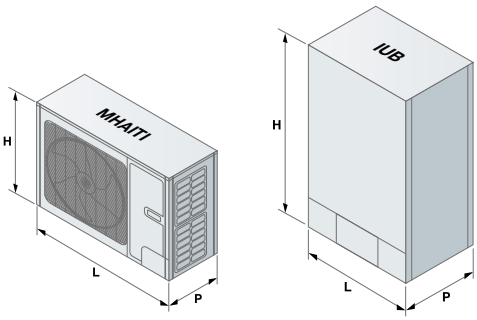

NEW Web code: **EESB2**

Electa-ECOS.2-B

MHAITI 114-116 +IUB 16

Cooling capacity:
11.3-11.6 kW

Heating capacity:
14.5-16.1 kW

Two-section reversible air-water heat pumps. Range with hermetic rotary DC Inverter compressors and R32 refrigerant gas.

KEY FEATURES

- **Low GWP R32 refrigerant**
- **Energy class A+++**
- **Temperature of the produced water up to 60°C**
- **Domestic hot water production from –25°C to +45°C outdoor air**
- **Indoor unit complete with circulator, expansion tank, 3-way valve for DHW and electrical resistance.**
- **Touch-screen control panel.**
- **APP for managing the unit via smartphone (iOS and Android)**
- **New digital inputs and outputs**

CONSTRUCTION FEATURES

UB INDOOR UNIT

Indoor unit for wall mounting installation:
- Structure: made of galvanised and painted steel plate.
- Water side heat exchanger: adequately insulated stainless steel plates, complete with antifreeze heater.
- Pump unit complete with: EC circulator, automatic air vent valve, safety valve, flow switch, expansion tank, pressure gauge, water filter.
- 3-way valve for the production of domestic hot water.
- Supplementary electrical resistance, system side.
- Control: microprocessor electronic control with touch-screen panel for integrated management of the heat pump and the heating system, according to the various requirements relating to the use of the energy sources:
  - 3-way diverter valve management for domestic hot water production.
  - Rapid heating function for domestic hot water.
  - Anti-legionella cycle function, with activation timer.
  - Auxiliary or supplementary heat source management.
  - Operation in silent mode with timer.
  - Weekly and daily time bands.
  - Holiday mode and antifreeze function.
  - Power consumption limiting function.
  - 2-way on/off valve management for shutting off a part of the system, in heating or cooling mode.
  - Management through room thermostat, as an alternative to the touch-screen panel.
  - Unit activation from external contact (remote ON OFF), DHW/system mode activation from external contact
  - Parental control and start-up menu password.
  - Pump contact and 3-way valve status (digital outputs).
- Unit complete with:
  - Outdoor temperature probe for set-point compensation.
  - Remote ambient air temperature probe, for managing the unit according to the ambient set-point.
  - Water temperature probe for domestic hot water tank (20 m).
  - Communication cable between outdoor and indoor units.
- RS485 interface for serial communication with other devices (Modbus RTU protocol).
- iOS and Android APP for managing the unit via smartphone and tablet.

MHAITI OUTDOOR UNIT

- Compressor: hermetic, twin rotary DC Inverter with steam injection, complete with thermal protection and casing heater
- Expansion valve: electronic.
- Cooling circuit with economiser
- Air side heat exchanger: finned coil with copper pipes and aluminium-manganese fins with Golden Fin anti-corrosion treatment in epoxy resin and hydrophilic treatment, complete with protection grilles.
- Fan: axial type impeller with DC brushless motors, equipped with internal thermal protection, accident protection grilles and proportional electronic device for continuous fan rotation speed adjustment.
- Structure: made of galvanised and painted steel plate RAL9002, complete with condensate drain pan and unit base antifreeze heater.

MODELS

MHAITI+USB: 2-section air-water heat pump.

SEPARATELY SUPPLIED ACCESSORIES

KSA - Rubber anti-vibration mounts.
KPRE - Wiring for RS485 serial connection to the touch-screen panel.

Features

COOL HEAT · ROTARY COMPRESSOR · INVERTER · LOW GWP · GAS R32 · SPLIT · EUROVENT CERTIFIED PERFORMANCE www.eurovent-certification.com

	MHAITI outdoor unit		114M	116M	116T
	IUB indoor unit		16M	16M	16T
❶	Heating capacity	kW	14,50	16,10	16,10
❶	Absorbed power	kW	3,87	4,41	4,41
❶	C.O.P.		3,75	3,65	3,65
❷	Heating capacity	kW	14,00	15,50	15,50
❷	Absorbed power	kW	2,98	3,44	3,44
❷	C.O.P.		4,70	4,50	4,50
❸	Cooling capacity	kW	11,30	11,60	11,60
❸	Absorbed power	kW	4,04	4,38	4,38
❸	E.E.R.		2,80	2,65	2,65
❹	Cooling capacity	kW	12,60	13,00	13,00
❹	Absorbed power	kW	3,41	3,60	3,60
❹	E.E.R.		3,70	3,61	3,61
❺	Sound pressure (outdoor unit)	dB(A)	47	47	47
❸	Available circulator head	kPa	54	48	48
	Electrical supply	V-ph-Hz	230-1-50	230-1-50	400-3+N-50
	Internal unit electrical resistance	no. x kW	2 x 3,0	2 x 3,0	2 x 3,0
	Refrigeration lines max length/height difference	m / m	15 / 15	15 / 15	15 / 15

	MHAITI outdoor unit		114M	116M	116T
	L - Width	mm	940	940	940
	H - Height	mm	840	840	840
	P - Depth	mm	460	460	460
	Weight	kg	104	104	110
	IUB indoor unit		16M	16M	16T
	L - Width	mm	460	460	460
	H - Height	mm	860	860	860
	P - Depth	mm	315	315	315
	Weight	kg	58	58	60

Data at the following conditions:
❶ Air: 7°C D.B. - 6°C W.B. - Water: 40/45°C.
❷ Air: 7°C D.B. - 6°C W.B. - Water: 30/35°C.
❸ Air: 35°C D.B. - Water: 12/7°C.
❹ Air: 35°C D.B. - Water: 23/18°C.
❺ In open field (Q = 2) at 5 m from the unit.
❻ Weight refers to the most complete set up.
Performance according to EN 14511

	ENERGY PERFORMANCE	MHAITI	114M	116M	116T
		IUB	16M	16M	16T
	AMBIENT HEATING - Low temperature application 35°C				
③	Pdesignh (EN 14825)	kW	12,00	13,00	13,00
③	SCOP (EN 14825)		4,65	4,60	4,45
④	η_s	%	183	181	175
④	Energy class		A+++	A+++	A+++
	AMBIENT HEATING - Average application temperature 55°C				
③	Pdesignh (EN 14825)	kW	13,00	13,00	13,00
③	SCOP (EN 14825)		3,50	3,50	3,35
④	η_s	%	137	137	131
④	Energy class		A++	A++	A++

③ In Average climatic conditions.
④ Seasonal energy efficiency: ambient heating in Average climate (EU Regulations No.811/2013 and No.813/2013)

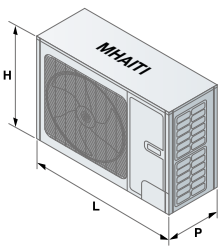

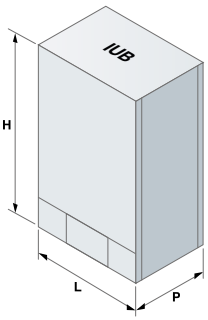

Electa-ECOS-T

MHAITI 104÷110 + IUT 06-10

Cooling capacity: 3,1÷6,5 kW

Heating capacity: 4÷9,5 kW

Capacity DHW: 185 l

KEY FEATURES

- **Low GWP R32 refrigerant**
- **Energy class A+++**
- **Temperature of the produced water up to 60°C**
- **Domestic hot water production from –25°C to +45°C outdoor air**
- **Floor indoor unit complete with circulator, expansion tank, 3-way valve, DHW tank and electrical resistance.**
- **Touch-screen control panel.**
- **APP for managing the unit via smartphone (iOS and Android)**

Two-section reversible air-water heat pumps with integrated tank for domestic hot water. Range with hermetic rotary DC Inverter compressors and R32 refrigerant gas.

CONSTRUCTION FEATURES

UT INDOOR UNIT

Indoor unit for floor installation:
- Structure: made of galvanised and painted steel plate.
- Water side heat exchanger: adequately insulated stainless steel plates, complete with antifreeze heater.
- Pump unit complete with: EC circulator, automatic air vent valve, safety valve, flow switch, expansion tank, pressure gauge, water filter.
- 3-way valve for the production of domestic hot water.
- Supplementary electrical resistance, system side.
- Domestic hot water buffer tank, complete with water temperature probe, anode and electrical resistance (3 kW).
- Control: electronic with microprocessor and touch-screen control panel for integrated management of the heat pump and the heating system, according to the various requirements relating to the use of the energy sources:
  - Domestic hot water production.
  - Rapid heating function for domestic hot water.
  - Anti-legionella cycle function, with activation timer.
  - Auxiliary or supplementary heat source management.
  - Operation in silent mode with timer.
  - Weekly and daily time bands.
  - Holiday mode and antifreeze function.
  - Power consumption limiting function.
  - 2-way on/off valve management for shutting off a part of the system, in heating or cooling mode.
  - Management through room thermostat, as an alternative to the touch-screen panel.
  - Unit activation from external contact (remote ON/OFF).
- Unit complete with:
  - Outdoor temperature probe for set-point compensation.
  - Remote ambient air temperature probe, for managing the unit according to the ambient set-point.
  - Communication cable between outdoor and indoor units.
- RS485 interface for serial communication with other devices (Modbus RTU protocol).
- iOS and Android APP for managing the unit via smartphone and tablet.

MHAITI OUTDOOR UNIT

- Compressor: hermetic, twin rotary DC Inverter with steam injection, complete with thermal protection and casing heater
- Expansion valve: electronic.
- Cooling circuit with economiser
- Air side heat exchanger: finned coil with copper pipes and aluminium-manganese fins with Golden Fin anti-corrosion treatment in epoxy resin and hydrophilic treatment.
- Fan: axial type impeller with DC brushless motors, equipped with internal thermal protection, accident protection grilles and proportional electronic device for continuous fan rotation speed regulation.
- Structure: made of galvanised and painted steel plate RAL9002, complete with condensate drain pan and unit base antifreeze heater.

MODELS

MHAITI+IUT: 2-section air-water heat pump.

SEPARATELY SUPPLIED ACCESSORIES

KSA - Rubber anti-vibration mounts.
KPRE - Wiring for RS485 serial connection to the touch-screen panel.

Features

	MHAITI outdoor unit		104	106	108	110
	IUT indoor unit		**06**	**06**	**10**	**10**
❶	Heating capacity	kW	4	5,9	8	9,5
❶	Absorbed power	kW	1,02	1,51	2,14	2,64
❶	C.O.P.		3,92	3,91	3,74	3,6
❷	Heating capacity	kW	4	6	8	9,5
❷	Absorbed power	kW	0,78	1,2	1,7	2,07
❷	C.O.P.		5,13	5,00	4,71	4,59
❸	Cooling capacity	kW	3,2	4,1	5,3	6,5
❸	Absorbed power	kW	0,94	1,28	1,73	2,27
❸	E.E.R.		3,42	3,2	3,06	2,86
❹	Cooling capacity	kW	3,8	5,8	7,0	8,5
❹	Absorbed power	kW	0,82	1,32	1,75	2,24
❹	E.E.R.		4,63	4,40	4,00	3,79
❺	Sound pressure (external unit)	dB(A)	37	37	41	42
❸	Available circulator head	kPa	73	70	66	58
	DHW tank capacity	l	185	185	185	185
	Electrical supply	V-ph-Hz	230-1-50	230-1-50	230-1-50	230-1-50
	Internal unit electrical resistance	kW	2 x 1,5	2 x 1,5	2 x 3,0	2 x 3,0
	Refrigeration lines max Height difference / length	m / m	20 / 15	20 / 15	25 / 15	25 / 15
	DIMENSIONS AND WEIGHTS					
	MHAITI outdoor unit		**104**	**106**	**108**	**110**
	L - Width	mm	975	975	980	980
	H - Height	mm	702	702	788	788
	P - Depth	mm	396	396	427	427
	Weight	kg	55	55	82	82
	IUT indoor unit		**06**	**06**	**10**	**10**
	L - Width	mm	600	600	600	600
	H - Height	mm	1750	1750	1750	1750
	P - Depth	mm	600	600	600	600
	Empty weight	kg	209	209	209	209

Data at the following conditions:
❶ Air: 7°C D.B. - 6°C W.B. - Water: 40/45°C.
❷ Air: 7°C D.B. - 6°C W.B. - Water: 30/35°C.
❸ Air: 35°C D.B. - Water: 12/7°C.
❹ Air: 35°C D.B. - Water: 23/18°C.
❺ In open field (Q = 2) at 5 m from the unit.
❻ Weight refers to the most complete set up.
Performance according to EN 14511

	ENERGY PERFORMANCE	MHAITI	104	106	108	110
		IUT	**06**	**06**	**10**	**10**
	AMBIENT HEATING - Average application temperature 55°C					
③	Pdesignh (EN 14825)	kW	5	5	7	8
③	SCOP (EN 14825)		3,27	3,25	3,31	3,25
④	η_s	%	128	127	129	127
④	Energy class		A++	A++	A++	A++
	WATER HEATING					
	Load profile		L	L	L	L
⑤	η_{wh}	%	101	101	89	89
⑤	Energy class		A	A	A	A

③ In Average climatic conditions.
④ Seasonal energy efficiency: ambient heating in Average climate (EU Regulations No.811/2013 and No.813/2013)
⑤ Water heating energy efficiency in Average climate (+7°C). (Regulations (EU) No.811/2013 and No.813/2013)

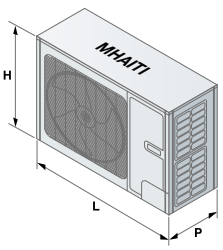

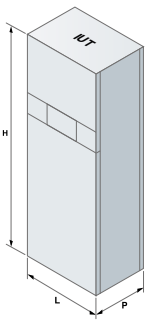

NEW

Web code: **ESW02**
Web code: **ESW01**

Electa-SAN Plus
Electa-SAN

TWCTZ 200-300 TWCZ 200-300

DHW capacity:
200-300 L

Electa-SAN

Electa-SAN Plus

Air-water heat pump for the production of domestic hot water.
Rotary hermetic compressor and R134a refrigerant gas.

KEY FEATURES

Renewable energy water heater

- **New Electa-SAN Plus models in A+ class**
- **Standard version and with additional solar thermal coil**
- **Heat pump operation with outdoor air temperature from -10°C to +43°C**
- **Contact for integration with photovoltaic system**

CONSTRUCTION FEATURES

- Carbon steel tank with double layer vitrification and internal treatment according to standards DIN 4753-3.
- Anti-corrosion magnesium anode to ensure the durability of the tank.
- Condenser wrapped externally to the boiler, free from scaling and chiller liquid-water contamination.
- Auxiliary coil for use in combination with solar panels (TWCZ-S; TWCTZ-S only)
- Thermal insulation in thick expanded polyurethane (PU) (45 and 50 mm).
- External coating in RAL7035 grey plastic material for TCWZ and RAL839 colour for TCWTZ
- Acoustically insulated plastic top cover.
- High efficiency compressor with R134a refrigerant.
- Electronic expansion valve.
- Finned coil heat exchanger with hydrophilic treatment for TCWTZ.
- Safety devices for high and low gas pressure.
- Electrical resistance available in the unit as a back-up with a safety thermostat, which ensures hot water at a constant temperature even in extreme winter conditions.

Electronic control and user interface for unit management:

- Tank temperature display.
- Domestic hot water set-point adjustment.
- Clock display and switch-on and shutdown timer.
- Electrical resistance management, in manual mode or in automatic integration.
- Anti-legionella cycle function, with activation timer.
- Indication of any alarms and malfunctions.
- Contact for integration with a photovoltaic system: the temperature set is raised to the highest possible value, on photovoltaic inverter enabling.
- ON-OFF contact to start the unit from an external switch.
- Option to manage domestic hot water recirculation or solar integration for TWCZ.

VERSION

Electa-SAN-Plus: A+ class

- TWCTZ-B: water heater with heat pump.
- TWCTZ-S: water heater with heat pump and additional solar thermal coil.

Electa-SAN: A class

- TWCZ-B: water heater with heat pump.
- TWCZ-S: water heater with heat pump and additional solar thermal coil.

Features

HOT WATER · ROTARY COMPRESSOR · GAS R134a · INDOOR

	MODEL		Electa-SAN Plus TWCTZ-B 200	Electa-SAN Plus TWCTZ-B 300	Electa-SAN Plus TWCTZ-S 200	Electa-SAN Plus TWCTZ-S 300	Electa-SAN TWCZ-B 200	Electa-SAN TWCZ-B 300	Electa-SAN TWCZ-S 200	Electa-SAN TWCZ-S 300
	Tank capacity	l	180	270	174	261	228	286	220	278
❶	Heating capacity	W	1800	1800	1800	1800	1870	1870	1870	1870
	Absorbed power	W	460	460	460	460	503	503	503	503
	Electrical resistance power	W	1500	1500	1500	1500	1200	1200	1200	1200
	Maximum operating pressure	bar	7	7	7	7	7	7	7	7
❷	COPDHW		3,14	3,16	3,14	3,16	2,64	2,85	2,64	2,85
❸	COPDHW		3,37	3,58	3,37	3,58	2,81	3,03	2,81	3,03
❶	Top-up times	h:min	04:46	07:02	04:46	07:02	05:38	06:57	05:38	06:57
❶	Top-up times with active resistance	h:min	02:36	04:01	02:36	04:01	03:03	03:46	03:03	03:46
❷	Maximum volume of DHW usable at 40°C	l	239	349	239	349	291	390	291	390
	Solar thermal coil surface	m2	-	-	1,0	1,5	-	-	1,2	1,2
	Maximum solar coil operating pressure	bar	-	-	7	7	-	-	6	6
	Nominal air flow	m3/h	450	450	450	450	450	450	450	450
	Air flow rate at the maximum available static pressure 60 Pa	m3/h	350	350	350	350	350	350	350	350
	Internal sound power	db(A)	58	59	58	59	58	58	58	58
❹	Sound pressure	db(A)	43	44	43	44	43	43	43	43
	Electrical supply	V-ph-Hz	230-1-50	230-1-50	230-1-50	230-1-50	230-1-50	230-1-50	230-1-50	230-1-50
	Maximum absorbed power	W	560	560	560	560	765	765	765	765
	Absorbed power in standby (Pes)	W	32	37	32	37	40	40	40	40
	Protection rating	IP	IPX1	IPX1	IPX1	IPX1	IPX1	IPX1	IPX1	IPX1

Data at the following conditions:

❶ Air 20°C D.B. - 15°C W.B.; water from 15°C to 55°C.

❷ Air 7°C D.B. - 6°C W.B.; water from 10°C to 55°C (EN 16147).

❸ Air 14°C D.B. - 12°C W.B.; water from 10°C to 55°C (EN 16147).

❹ According to ISO 3744:2010 at 1 m from the unit

DIMENSIONS AND WEIGHTS									
MODEL		TWCTZ-B 200	TWCTZ-B 300	TWCTZ-S 200	TWCTZ-S 300	TWCZ-B 200	TWCZ-B 300	TWCZ-S 200	TWCZ-S 300
L - Width	mm	560	640	560	640	655	655	655	655
H - Height	mm	1770	1880	1770	1880	1638	1888	1638	1888
P - Depth	mm	590	670	590	670	706	706	706	706
Empty weight	kg	92	112	113	136	98	107	113	122
Weight with a full water tank	kg	272	382	287	397	326	393	333	400

	ENERGY PERFORMANCE		TWCTZ-B 200	TWCTZ-B 300	TWCTZ-S 200	TWCTZ-S 300	TWCZ-B 200	TWCZ-B 300	TWCZ-S 200	TWCZ-S 300
	WATER HEATING									
④	Load profile		L	XL	L	XL	L	XL	L	XL
④	η_{wh}	%	132,3	131,5	132,3	131,5	101	117	101	117
④	Energy class		A+	A+	A+	A+	A	A	A	A
④	Annual energy consumption	kWh/annum	774	1274	774	1274	1012	1426	1012	1426

④ Water heating energy efficiency in average climatic conditions (+7°C). (Regulations (EU) No.812/2013 and No.814/2013)

Operating range:

- Inlet air/working ambient temperature: -10 to 43°C
- Domestic hot water up to 60°C for TCWTZ, 65°C for TCWZ.

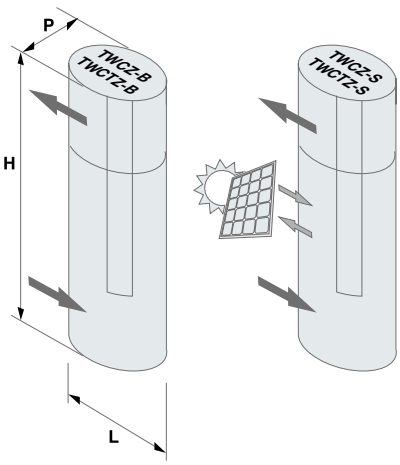

MidiPACK-I

TCAITY-THAITY 120÷130

Cooling capacity:
18,8÷29,3 kW

Heating capacity:
20÷30,4 kW

Water chillers and packaged reversible air-cooled heat pumps with axial fans. Range with scroll hermetic compressors, DC Inverter and R410A refrigerant gas.

KEY FEATURES

- **Hot water up to -15°C outdoor air**
- **Temperature of the produced water up to 60°C**
- **Version with pump or with pump and storage tank**
- **Integrated MASTER/SLAVE control**

CONSTRUCTION FEATURES

- Compressor: scroll type, rotary, hermetic with Inverter actuation, complete with thermal protection and casing heater.
- Water side heat exchanger: adequately insulated stainless steel plates, complete with antifreeze heater and water flow differential pressure switch.
- Air side heat exchanger: featuring finned coil with copper pipes and aluminium fins for TCAITY with hydrophilic treatment for THAITY, complete with protection grilles.
- Fan: external rotor axial type electric fans equipped with internal thermal protection, accident protection grilles and proportional electronic device for continuous fan rotation speed regulation.
- Control: microprocessor electronic control with Adaptive Function Plus logic.
- Structure: made of galvanised and painted steel plate, complete with condensate drain pan and unit base antifreeze heater for THAITY.
- The unit is also complete with:
  - outdoor air temperature probe for set-point compensation;
  - electronic expansion valve;
  - display of cooling circuit high and low pressure;
  - Master/Slave control up to 4 units in parallel;
  - clock board.

VERSION

T - High efficiency.

MODELS

TCAITY: unit designed for cooling only.
THAITY: heat pump unit.

PUMP SET-UP

- Pump unit complete with: EC circulator with 3 speed selector or continuous speed regulation or electric pump, membrane expansion tank, manual air vent valve, safety valve and pressure gauge.

TANK&PUMP SET UP

- Pump unit complete with: inertial buffer tank, circulator or electric circulation pump, membrane expansion tank, manual air vent valve, safety valve, and pressure gauge.

FACTORY FITTED ACCESSORIES

- Forced Download. Compressor partialisation or switch-off to limit power and current consumption (digital input).
- Condensing control with fans with EC motor.
- Silenced set up.
- Antifreeze heater on the tank.
- Circulator/electric pump antifreeze heater.
- Pre-painted copper/coils or copper/copper coils.
- Digital input for double set-point.
- 4-20 mA analogue signal for shifting set-point.
- Low water set-point temperature.

SEPARATELY SUPPLIED ACCESSORIES

- 3-way valve for the production of domestic hot water, managed by regulation.
- Additional electrical resistance for heat pump, managed by regulation.
- Remotable outdoor air temperature probe for compensation of the set-point.
- Water filter.
- Rubber anti-vibration mounts.
- Remote keypad with display.
- Interfaces for serial communication with other devices.
- RS485/USB serial converter.
- Rhoss supervisors for unit monitoring and remote management.

Features

COOL · COOL HEAT · COMPRESSOR SCROLL · INVERTER · OUTDOOR · GAS R410A · ADAPTIVE FUNCTION PLUS · EUROVENT CERTIFIED PERFORMANCE www.eurovent-certification.com

	TCAITY MODEL		120	125	130
❶	Cooling capacity	kW	18,8	25,2	29,3
❶	Absorbed power	kW	6,53	8,72	10,17
❶	E.E.R.		2,88	2,89	2,88
	THAITY MODEL		**120**	**125**	**130**
❷	Heating capacity	kW	20	25,6	30,4
❷	Absorbed power	kW	6,15	7,83	9,5
❷	C.O.P. NOM		3,25	3,27	3,2
❸	Heating capacity	kW	21,1	26,1	30,7
❸	Absorbed power	kW	5,2	6,41	7,62
❸	C.O.P.		4,06	4,07	4,03
❹	Heating capacity	kW	14,8	18,1	21,3
❹	Absorbed power	kW	4,92	6,51	7,61
❹	C.O.P.		3,01	2,78	2,8
❶	Cooling capacity	kW	18,5	24,1	28,3
❶	E.E.R.		2,7	2,75	2,71
	TCAITY-THAITY MODEL		**120**	**125**	**130**
❺	Sound pressure	dB(A)	47	50	51
❶	P0 circulator available head	kPa	77	80	67
	Buffer tank water content	l	110	110	110
	Electrical supply	V-ph-Hz	400-3+N-50	400-3+N-50	400-3+N-50
	DIMENSIONS AND WEIGHT		**120**	**125**	**130**
	L - PUMP width	mm	1522	1522	1522
	L - TANK&PUMP width	mm	1625	1625	1625
	H - PUMP height	mm	1280	1280	1280
	H - TANK&PUMP height	mm	1590	1590	1590
	P - PUMP Depth	mm	600	600	600
	P - TANK&PUMP Depth	mm	600	600	600
❻	PUMP Weight	kg	245	265	275
❻	TANK&PUMP Weight	kg	345	365	375

Data at the following conditions:
❶ Air: 35°C D.B. - Water: 12/7°C.
❷ Air: 7°C D.B. - 6°C W.B. - Water: 40/45°C.
❸ Air: 7°C D.B. - 6°C W.B. - Water: 30/35°C.
❹ Air: -7°C D.B. - Water: 30/35°C.
❺ In open field (Q = 2) at 5 m from the unit.
❻ Weight refers to the most complete setup.
Performance according to EN 14511. P0 setup.

	SEASONAL ENERGY PERFORMANCE		120	125	130
	TCAITY MODEL SEASONAL PERFORMANCE IN COOLING MODE				
①	Pdesignc (EN 14825)	kW	18,8	25,2	29,3
①	SEER (EN 14825)		4,31	4,36	4,32
②	$\eta_{s,c}$	%	169	171	170
	THAITY MODEL SEASONAL PERFORMANCE IN HEATING MODE - Low temperature application 35°C				
③	Pdesignh (EN 14825)	kW	21	26	30
③	SCOP (EN 14825)		4,17	3,63	3,88
④	η_s	%	164	142	152
④	Energy class		A++	A+	A++
	THAITY MODEL SEASONAL PERFORMANCE IN HEATING MODE - Medium temperature application 55°C				
③	Pdesignh (EN 14825)	kW	19	-	-
③	SCOP (EN 14825)		3,41	-	-
④	η_s	%	133	-	-
④	Energy class		A++	-	-

① Low temperature application (7°C)

② Seasonal energy efficiency: low temperature cooling (EU Regulation 2016/2281)

③ In Average climatic conditions.

④ Seasonal energy efficiency: ambient heating in Average climate (EU Regulations No.811/2013 and No.813/2013)

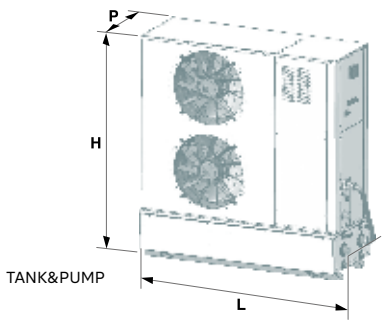

MidiPACK-I ECO

TCAITI-THAITI 131÷155

Cooling capacity:
29,5÷55,2 kW

Heating capacity:
32,4÷58,8 kW

KEY FEATURES

- **Efficient and eco-friendly unit in R32**
- **Hot water up to -15°C outdoor air**
- **Temperature of the produced water up to 60°C**
- **Plug&Play unit with integrated hydraulic module**
- **Optional EC fans and inverter-based circulation pump**
- **Integrated MASTER/SLAVE control**

Water chillers and packaged reversible air-cooled heat pumps with axial fans.
Series with scroll hermetic compressors, DC Inverter and R32 refrigerant gas.

CONSTRUCTION FEATURES

- Compressor: scroll type, rotary, hermetic with Inverter actuation, complete with thermal protection and casing heater.
- Water side heat exchanger: adequately insulated stainless steel plates, complete with antifreeze heater and water flow differential pressure switch.
- Air side heat exchanger: finned coil with copper pipes and aluminium fins, complete with protection grilles.
- Fan: external rotor axial type electric fans equipped with internal thermal protection, accident protection grilles and proportional electronic device for continuous fan rotation speed adjustment.
- Control: microprocessor electronic control with Adaptive Function Plus logic.
- Structure: made of galvanised and painted steel plate
- The unit is also complete with:
  - outdoor air temperature probe for compensation of the Set-point;
  - display of cooling circuit high and low pressure;
  - electronic expansion valve;
  - Master/Slave control up to 4 units in parallel;
  - clock board.

VERSION

T - High efficiency.

MODELS

TCAITI: unit designed for cooling only.
THAITI: heat pump unit.

PUMP SET UP

Pump unit with single or double electric pump, including an automatic actuation pump in standby, complete with expansion tank, air vent valves, safety valve and water side pressure gauge. The pumps are available in low or high pressure head versions, and with INVERTER operation.

TANK&PUMP SET UP

- Pump unit complete with inertial buffer tank and single or double electric pump, including an automatic actuation pump in standby, complete with expansion tank, air vent valves, safety valve and water side pressure gauge. The pumps are available in low or high pressure head versions, and with INVERTER operation.

FACTORY FITTED ACCESSORIES

- Pre-painted copper/aluminium coils with hydrophilic treatment or copper/copper.
- Desuperheater.
- 100% heat recovery unit (only TCAITI)
- 3-way diverter valve for domestic hot water production, managed by the adjustment.
- Condensing control with fans with EC motor.
- Base antifreeze heater
- Antifreeze heater for buffer tank and electric pumps
- Forced Download. Compressor partialisation or switch-off to limit power and current consumption (digital input).
- Double safety valves.
- Refrigerant leak detector
- Digital input for double set-point.
- 4-20 mA analogue signal for shifting set-point.
- Energy parameters measurement.
- Silenced set up.
- Cooling circuit high and low pressure gauges.
- Low water set-point temperature.

SEPARATELY SUPPLIED ACCESSORIES

- 3-way valve for the production of domestic hot water, managed by the adjustment.
- Remotable outdoor air temperature probe for compensation of the set-point.
- Additional electrical resistance for heat pump, managed by the adjustment.
- Rubber anti-vibration mounts.
- Water filter.
- Thermostat with display.
- Remote keypad with display.
- Interfaces for serial communication with other devices.
- Serial converter (RS485/USB).
- Rhoss supervisors for unit monitoring and remote management.

Features

COOL · COOL HEAT · COMPRESSOR SCROLL · INVERTER · LOW GWP · GAS R32 · OUTDOOR · ADAPTIVE FUNCTION PLUS · EUROVENT CERTIFIED PERFORMANCE www.eurovent-certification.com

	TCAITI MODEL		131	140	148	155
❶	Cooling capacity	kW	30,1	38,7	48	55,2
❶	Absorbed power	kW	10,13	13,07	15,84	18,46
❶	E.E.R.		2,97	2,96	3,03	2,99
	THAITI MODEL		**131**	**140**	**148**	**155**
❷	Heating capacity	kW	32,4	42	53,2	58,8
❷	Absorbed power	kW	9,67	12,61	15,88	18,32
❷	C.O.P.		3,35	3,33	3,35	3,21
❸	Heating capacity	kW	32,9	42,9	53,8	59,5
❸	Absorbed power	kW	7,99	10,51	13,03	15,14
❸	C.O.P		4,12	4,08	4,13	3,93
❹	Heating capacity	kW	22,8	29,1	36,9	40,9
❹	Absorbed power	kW	7,65	10	12,42	14,4
❹	C.O.P.		2,98	2,91	2,97	2,84
❶	Cooling capacity	kW	29,5	38,3	47,1	54
❶	E.E.R.		2,88	2,91	2,96	2,91
	TCAITI-THAITI MODELS		**131**	**140**	**148**	**155**
❺	Sound pressure	dB(A)	51,5	53,5	54,5	55,5
	Scroll compressor	no.	1 inverter	1 inverter	1 inverter	1 inverter
	Circuits	no.	1	1	1	1
	Buffer tank water content (TANK&PUMP)	l	150	150	150	150
❶	Standard head pump nominal available head (TCAITI)	kPa	129	122	116	110
	Electrical supply	V-ph-Hz	400-3+N-50	400-3+N-50	400-3+N-50	400-3+N-50
	DIMENSIONS AND WEIGHT		**131**	**140**	**148**	**155**
	L - Width	mm	2320	2320	2320	2320
	H - Height	mm	1590	1590	1590	1590
	P - Depth	mm	1000	1000	1000	1000
❻	TCAITI weight	kg	450	470	480	490
❻	THAITI weight	kg	470	490	500	510

Data at the following conditions:
❶ Air: 35°C D.B. - Water: 12/7°C.
❷ Air: 7°C D.B. - 6°C W.B. - Water: 40/45°C.
❸ Air: 7°C D.B. - 6°C W.B. - Water: 30/35°C.
❹ Air: -7°C D.B. - Water: 30/35°C.
❺ In open field (Q = 2) at 5 m from the unit.
❻ Weight referred to the unit without load and not accessorised..
Performance according to EN 14511.

	SEASONAL ENERGY PERFORMANCE		131	140	148	155
	TCAITI MODEL SEASONAL PERFORMANCE IN COOLING MODE					
①	Pdesignc (EN 14825)	kW	30,1	38,7	48	55,2
①	SEER (EN 14825)		4,65	4,82	4,91	4,7
②	$\eta_{s,c}$	%	183	190	193	185
	THAITI MODEL SEASONAL PERFORMANCE IN HEATING MODE					
③	Pdesignh (EN 14825)	kW	30	38	48	54
③	SCOP (EN 14825)		3,9	3,91	3,95	3,9
④	η_s	%	153	154	155	153
④	Energy class		A++	A++	A++	A++

① Low temperature application (7°C)
② Seasonal energy efficiency: low temperature cooling (EU Regulation 2016/2281)
③ In Average climatic conditions, low temperature application (35°C)
④ Seasonal energy efficiency: low temperature heating in Average climate (EU Regulations No.811/2013 and No.813/2013)

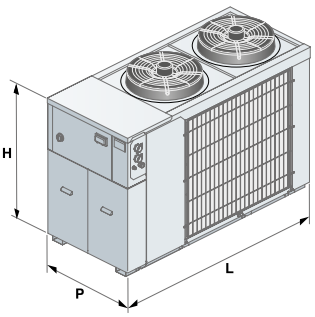

MidiPACK-I

TCAITY-THAITY 138÷262

Cooling capacity:
37,4÷62,6 kW

Heating capacity:
40,2÷71 kW

KEY FEATURES

- **Hot water up to -15°C outdoor air**
- **Temperature of the produced water up to 60°C**
- **Plug&Play unit with integrated hydraulic module**
- **Optional EC fans and inverter-based circulation pump**
- **Multi-purpose for systems with 2 pipes + DHW (with optional RC100)**
- **Integrated MASTER/SLAVE control**

Water chillers and packaged reversible air-cooled heat pumps with axial fans.
Range with scroll hermetic compressors, DC Inverter and R410A refrigerant gas.

CONSTRUCTION FEATURES

- Compressor: scroll type, rotary, hermetic with Inverter actuation, complete with thermal protection and casing heater.
- Water side heat exchanger: adequately insulated stainless steel plates, complete with antifreeze heater and water flow differential pressure switch.
- Air side heat exchanger: finned coil with copper pipes and aluminium fins, complete with protection grilles.
- Fan: external rotor axial type electric fans equipped with internal thermal protection, accident protection grilles and proportional electronic device for continuous fan rotation speed regulation.
- Control: microprocessor electronic control with Adaptive Function Plus logic.
- Structure: made of galvanised and painted steel plate
- The unit is also complete with:
  - outdoor air temperature probe for set-point compensation;
  - display of cooling circuit high and low pressure;
  - electronic expansion valve;
  - Master/Slave control up to 4 units in parallel;
  - clock board.

VERSION

T - High efficiency.

MODELS

TCAITY: unit designed for cooling only.
THAITY: heat pump unit.

PUMP SET-UP

Pump unit with single or double electric pump, including an automatic actuation pump in standby, complete with expansion tank, air vent valves, safety valve and water side pressure gauge. The pumps are available in low or high pressure head versions, and with INVERTER operation.

TANK&PUMP SET UP

- Pump unit complete with inertial buffer tank and single or double electric pump, including an automatic actuation pump in standby, complete with expansion tank, air vent valves, safety valve and water side pressure gauge. The pumps are available in low or high pressure head versions, and with INVERTER operation.

FACTORY FITTED ACCESSORIES

- Pre-painted copper/aluminium coils with hydrophilic treatment or copper/copper.
- Desuperheater.
- 100% heat recovery unit.
- 3-way diverter valve for the production of domestic hot water, managed by regulation.
- Condensing control with fans with EC motor.
- Base antifreeze heater
- Antifreeze heater for buffer tank and electric pumps
- Forced Download. Compressor partialisation or switch-off to limit power and current consumption (digital input).
- Refrigerant leak detector
- Digital input for double set-point.
- 4-20 mA analogue signal for shifting set-point.
- Energy parameters measurement.
- Silenced set up.
- Cooling circuit high and low pressure gauges.
- Low water set-point temperature.

SEPARATELY SUPPLIED ACCESSORIES

- 3-way valve for the production of domestic hot water, managed by regulation.
- Remotable outdoor air temperature probe for compensation of the set-point.
- Additional electrical resistance for heat pump, managed by regulation.
- Rubber anti-vibration mounts.
- Water filter.
- Thermostat with display.
- Remote keypad with display.
- Interfaces for serial communication with other devices.
- Serial converter (RS485/USB).
- Rhoss supervisors for unit monitoring and remote management.

Features

COOL · COOL HEAT · COMPRESSOR SCROLL · INVERTER · GAS R410A · OUTDOOR · ADAPTIVE FUNCTION PLUS · EUROVENT CERTIFIED PERFORMANCE www.eurovent-certification.com

	TCAITY MODEL		138	146	154	262
❶	Cooling capacity	kW	37,4	47,7	55,1	62,6
❶	Absorbed power	kW	13,6	16,1	18,4	22,8
❶	E.E.R.		2,76	2,97	2,99	2,75
	THAITY MODEL		**138**	**146**	**154**	**262**
❷	Heating capacity	kW	40,2	52,1	58,7	71
❷	Absorbed power	kW	12,5	16,2	18,2	22,2
❷	C.O.P.		3,21	3,22	3,23	3,2
❸	Heating capacity	kW	40,2	54,2	60,4	74
❸	Absorbed power	kW	10,3	14,3	15,9	20,2
❸	C.O.P.		3,91	3,8	3,81	3,67
❹	Heating capacity	kW	28,3	38,6	42,3	51
❹	Absorbed power	kW	9,7	13,4	14,9	19,5
❹	C.O.P.		2,92	2,89	2,83	2,62
❶	Cooling capacity	kW	36,7	46,1	54	61,4
❶	E.E.R.		2,69	2,9	2,92	2,7
	TCAITY-THAITY MODEL		**138**	**146**	**154**	**262**
❺	Sound pressure	dB(A)	54	55	55	57
	Scroll compressor	n.	1 inverter	1 inverter	1 inverter	1 inverter + 1
	Circuits	no.	1	1	1	1
	Buffer tank water content (TANK&PUMP)	l	80	150	150	150
❶	Standard head pump nominal available head (TCAITY)	kPa	124	98	107	111
	Electrical supply	V-ph-Hz	400-3+N-50	400-3+N-50	400-3+N-50	400-3+N-50
	DIMENSIONS AND WEIGHTS		**138**	**146**	**154**	**262**
	L - Width	mm	1710	2315	2315	2315
	H - Height	mm	1570	1570	1570	1570
	P - Depth	mm	1000	1000	1000	1000
❻	TCAITY weight	kg	545	640	690	815
❻	THAITY weight	kg	555	660	720	835

Data at the following conditions:
❶ Air: 35°C D.B. - Water: 12/7°C.
❷ Air: 7°C D.B. - 6°C W.B. - Water: 40/45°C.
❸ Air: 7°C D.B. - 6°C W.B. - Water: 30/35°C.
❹ Air: -7°C D.B. - Water: 30/35°C.
❺ In open field (Q = 2) at 5 m from the unit.
❻ Weight refers to the most complete setup.
Performance according to EN 14511.

	SEASONAL ENERGY PERFORMANCE		138	146	154	262
	TCAITY MODEL SEASONAL PERFORMANCE IN COOLING MODE					
①	Pdesignc (EN 14825)	kW	37,4	47,7	55,1	62,6
①	SEER (EN 14825)		4,33	4,31	4,27	4,31
②	ηs,c	%	170	169	168	169
	THAITY MODEL SEASONAL PERFORMANCE IN HEATING MODE					
③	Pdesignh (EN 14825)	kW	40	54	60	70
③	SCOP (EN 14825)		3,9	3,85	3,84	4,08
④	ηs	%	153	151	150	160
④	Energy class		A++	A++	A++	A++

① Low temperature application (7°C)
② Seasonal energy efficiency: low temperature cooling (EU Regulation 2016/2281)
③ In Average climatic conditions, low temperature application (35°C)
④ Seasonal energy efficiency: low temperature heating in Average climate (EU Regulations No.811/2013 and No.813/2013)

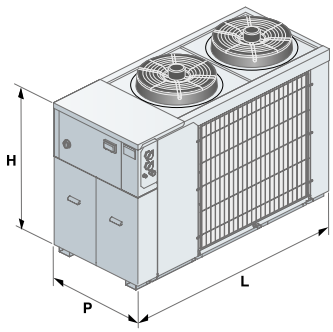

EasyPACK-I

TCAIY-THAIY 270÷2130

Cooling capacity:
67,1÷130,4 kW

Heating capacity:
71,2÷134,6 kW

THAITY 2130 with coil protection metal filters accessory

TCAITY 2100 with coil protection metal filters accessory

KEY FEATURES

- **Chillers and heat pumps with inverter compressors**
- **Precise and efficient power modulation**
- **Plug&Play unit with integrated hydronic module and heat recovery**
- **Integrated MASTER/SLAVE control**

Water chillers and packaged reversible air-cooled heat pumps with axial fans.
Range with scroll hermetic compressors, DC Inverter and R410A refrigerant.

CONSTRUCTION FEATURES

- Compressor: scroll type, rotary, hermetic and with Inverter actuation (1+i) complete with thermal protection and casing heater.
- Continuous regulation with high efficiency at partial loads.
- Water side heat exchanger: with stainless steel plates, complete with closed cell polyurethane foam rubber insulation and water flow differential pressure switch.
- Air side heat exchanger: featuring micro-channels (TCAIY) or finned coil with copper pipes and aluminium fins (THAIY).
- Fan: external rotor axial type electric fans with internal thermal protection, accident protection grilles. The electric fans, based on the sizes, are EC fans or fitted with a proportional electronic device for continuous regulation of the rotation speed of the fans.
- Control: microprocessor electronic control with Adaptive Function Plus logic.
- Structure: load-bearing structure made of galvanised and painted steel plate with polyester powder coating.
- The unit is also complete with:
  - compressor and fan circuit breaker switches;
  - electronic expansion valve;
  - display of cooling circuit high and low pressure;
  - Master/Slave control up to 4 units in parallel;
  - clock board;
  - control of Variable Primary Flow (VPF_R).

VERSIONS

- T - High efficiency version with oversized condensing section (TCAITY-THAITY).
- Q - Super-silenced version complete with compressor technical compartment soundproofing, reduced speed fans and oversized condensing section (TCAIQY-THAIQY).

MODELS

- TCAITY: high efficiency unit designed for cooling only.
- TCAIQY: super silenced unit designed for cooling only.
- THAITY: heat pump unit.
- THAIQY: super silenced heat pump unit.

FACTORY FITTED ACCESSORIES

- PUMP with single or double electric pump, one of which automatic in standby. The electric pumps are available in the low or high head versions.
- TANK&PUMP with 230 - 440 litre integrated buffer tank (depending on the sizes) and single or double electric pump, complete with expansion tank, air vent valves, safety valve and water side pressure gauge.
- Inverter pump control for unit start-up.
- Desuperheater.
- 100% heat recovery unit
- Condensing control with fans with EC motor (standard in sizes 270-2100).
- Condensing control with over-pressure fans (T version only)
- Power factor correction capacitors (cosϕ > 0.94).
- Forced limit of power consumption.
- Forced noise limit.
- Energy parameter measuring device.
- Optimised energy efficiency.
- Soft starter.
- Technical compressor compartment soundproofing.
- Compressor soundproof enclosures.
- Cooling circuit outlet and inlet valves.
- Refrigerant leak detector.
- Cooling circuit high and low pressure gauges.
- Double safety valves.
- Metal filters or coil protection nets.
- Microchannel coils with E-coating treatment, copper/copper, copper/aluminium or pre-painted copper/aluminium depending on the versions.
- Control of min/max power supply voltage.
- Digital input for double set-point.
- 4-20 mA analogue signal for shifting set-point.
- Evaporator antifreeze heater, electrical panel, buffer tank, electric pumps and heat exchangers for heat recovery, if applicable.
- Interfaces for serial communication with other devices.
- Rubber anti-vibration mounts.

SEPARATELY SUPPLIED ACCESSORIES

- Remote keypad with display.
- Thermostat with display.
- Rhoss supervisors for unit monitoring and remote management.
- Rhoss sequencer for integrated management of multiple chillers.

Features

COOL · COOL HEAT · SCROLL COMPRESSOR · INVERTER · GAS R410A · OUTDOOR · ADAPTIVE FUNCTION PLUS · EUROVENT CERTIFIED PERFORMANCE www.eurovent-certification.com

	TCAITY-TCAIQY MODEL		270	280	290	2100	2115	2130
❶	Nominal cooling capacity	kW	69,8	82,6	90,3	97,9	117	130,4
❶	Nominal cooling capacity	kW	67,8	80,8	87,7	93,4	111,4	125,5
❶	E.E.R.		3,16	3,17	3,15	3,02	3,1	3,14
❶	E.E.R.		3,01	3,06	3	2,84	2,9	3,01
❶	Absorbed power	kW	22,09	26,06	28,67	32,42	37,74	41,53
❶	Absorbed power	kW	22,52	26,41	29,23	32,89	38,41	41,69
	THAITY-THAIQY MODEL		**270**	**280**	**290**	**2100**	**2115**	**2130**
❷	Nominal heating capacity	kW	73,4	85,4	92,5	100,6	121,5	134,6
❷	Nominal heating capacity	kW	71,2	83,4	90,4	98,7	117,4	130,6
❷	C.O.P.		3,37	3,34	3,36	3,34	3,37	3,32
❷	C.O.P.		3,31	3,33	3,32	3,3	3,34	3,36
❶	Nominal cooling capacity	kW	67,1	79,3	86,8	93,5	112,6	126,5
❶	Nominal cooling capacity	kW	65	77,9	84,7	90,3	108,6	123,5
❷	Absorbed power	kW	21,78	25,57	27,53	30,12	36,05	40,54
❷	Absorbed power	kW	21,51	25,05	27,23	29,91	35,15	38,87
	TCAIY-THAIY MODEL		**270**	**280**	**290**	**2100**	**2115**	**2130**
❸	TCAITY-THAITY sound pressure	dB(A)	52	53	53	53	55	56
❸	TCAIQY-THAIQY sound pressure	dB(A)	45	46	46	46	49	50
❹	TCAITY-THAITY sound power	dB(A)	84	85	85	85	87	88
❹	TCAIQY-THAIQY sound power	dB(A)	77	77,5	77,5	77,5	81	82
	Scroll compressors	n.			1 inverter + 1			
	Circuits	n.	1	1	1	1	2	2
	Electrical supply	V-ph-Hz	400-3+N-50	400-3+N-50	400-3+N-50	400-3+N-50	400-3+N-50	400-3+N-50
	DIMENSIONS AND WEIGHTS		**270**	**280**	**290**	**2100**	**2115**	**2130**
	L - Width	mm	3250	3250	3250	3250	3450	3450
	H - Height	mm	1540	1540	1540	1540	2000	2000
	P - Depth	mm	1210	1210	1210	1210	1520	1520
❺	TCAITY weight	kg	765	790	795	800	1125	1145
❺	THAITY weight	kg	880	915	920	925	1325	1345

Data at the following conditions:
❶ Air: 35°C - Water: 12/7°C
❷ Air: 7°C, D.B. - 6°C W.B.- Water: 40/45°C.
❸ In open field (Q = 2) at 10 m from the unit.
❹ Total sound power level in dB(A) based on measurements carried out in accordance with regulation UNI EN-ISO 9614.
❺ Weight referred to the unit without load and not accessorised.
TCAIQY-THAIQY super-silenced versions.
Performance according to EN 14511.

	SEASONAL ENERGY PERFORMANCE		270	280	290	2100	2115	2130
	TCAITY MODEL SEASONAL PERFORMANCE IN COOLING MODE							
①	Pdesignc (EN 14825)	kW	69,8	82,6	90,3	97,9	117	130,4
①	SEER (EN 14825)		4,59	4,69	4,65	4,6	4,27	4,27
②	$\eta_{s,c}$	%	181	184	183	181	168	168
	TCAIQY MODEL SEASONAL PERFORMANCE IN COOLING MODE							
①	Pdesignc (EN 14825)	kW	67,8	80,8	87,7	93,4	111,4	125,5
①	SEER (EN 14825)		4,49	4,58	4,49	4,45	4,11	4,12
②	$\eta_{s,c}$	%	176	180	177	175	161	162
	THAITY MODEL SEASONAL ENERGY PERFORMANCE IN HEATING MODE							
③	Pdesignh (EN 14825)	kW	57	65	70	95	121	126
③	SCOP (EN 14825)		4,19	4,27	4,26	4,15	3,99	4,03
④	η_s	%	165	168	167	163	156	158
④	Energy class		A++	A++	A++	-	-	-
	THAIQY MODEL SEASONAL ENERGY PERFORMANCE IN HEATING MODE							
③	Pdesignh (EN 14825)	kW	54	63	69	93	111	133
③	SCOP (EN 14825)		4,04	4,17	4,11	4,06	3,88	3,96
④	η_s	%	159	164	162	160	152	155
④	Energy class		A++	A++	A++	-	-	-

① Low temperature application (7°C)
② Seasonal energy efficiency: low temperature cooling (EU Regulation 2016/2281)
③ In Average climatic conditions, low temperature application (35°C)
④ Seasonal energy efficiency: low temperature heating in Average climate (EU Regulations No.811/2013 and No.813/2013)

Compact-Y NF Plus

THAETY 115÷127 NF

Cooling capacity:
15,5÷26,6 kW

Heating capacity:
16,6÷30,4 kW

Packaged reversible air-cooled heat pumps with axial fans. Range with scroll hermetic compressors and R410A refrigerant gas.

KEY FEATURES

- **Hot water up to –15°C outdoor air**
- **Temperature of the produced water up to 60°C**
- **Plug&Play unit with integrated hydraulic module**
- **Included evaporating/ condensing control**
- **Integrated MASTER/SLAVE control**

CONSTRUCTION FEATURES

- Compressor: hermetic, rotary scroll compressor, complete with thermal protection and casing heater for mod. 127.
- Water side heat exchanger: adequately insulated stainless steel plates, complete with antifreeze heater and water flow differential pressure switch.
- Air side heat exchanger: featuring finned coil with copper pipes and aluminium fins with hydrophilic treatment and complete with protection grille.
- Fan: external rotor axial type electric fans equipped with internal thermal protection, accident protection grilles and proportional electronic device for continuous fan rotation speed regulation.
- Control: microprocessor electronic control with Adaptive Function Plus logic.
- Structure: made of galvanised and painted steel plate, complete with condensate drain pan and unit base antifreeze heater.
- The unit is also complete with:
  - outdoor air temperature probe for compensation of the Set-point;
  - display of cooling circuit high and low pressure;
  - Master/Slave control up to 4 units in parallel;
  - clock board.

VERSION

- T - High efficiency/temperature version.

MODELS

- THAETY: heat pump unit.

PUMP SET-UP

- Pump unit complete with: circulator or electric circulation pump, membrane expansion tank, manual air vent valve, safety valve and pressure gauge.

TANK&PUMP SET UP

- Pump unit complete with: inertial buffer tank, circulator or electric circulation pump, membrane expansion tank, manual air vent valve, automatic air vent valve, safety valve, and pressure gauge.

FACTORY FITTED ACCESSORIES

- Soft-start device.
- Silenced set up.
- Antifreeze heater on the tank.
- Compressor casing heater (mod. 115-124).
- Digital input for double set-point.
- 4-20 mA analogue signal for shifting set-point.
- Low water set-point temperature.

SEPARATELY SUPPLIED ACCESSORIES

- 3-way valve for the production of domestic hot water, managed by regulation.
- Additional electrical resistance for heat pump, managed by regulation.
- Outdoor air temperature probe for set-point compensation.
- Rubber anti-vibration mounts.
- Water filter.
- Remote keypad with display.
- Interfaces for serial communication with other devices.
- Serial converter (RS485/USB).
- Rhoss supervisors for unit monitoring and remote management.

Features

COOL HEAT · COMPRESSOR SCROLL · OUTDOOR · GAS R410A · ADAPTIVE FUNCTION PLUS · EUROVENT CERTIFIED PERFORMANCE www.eurovent-certification.com

	THAETY NF MODEL		115	117	122	124	127
❶	Heating capacity	kW	16,6	17,7	23,4	25,9	30,4
❶	Absorbed power	kW	5,72	6,32	8,18	9,08	10,03
❶	C.O.P.		2,9	2,8	2,86	2,85	3,03
❷	Heating capacity	kW	18	19	24,8	27,8	32,3
❷	Absorbed power	kW	4,33	4,53	5,9	6,59	7,58
❷	C.O.P.		4,16	4,19	4,2	4,22	4,26
❸	Heating capacity	kW	11,7	12	15,7	17,9	20,8
❸	C.O.P.		2,77	2,77	2,8	2,77	2,84
❹	Cooling capacity	kW	15,5	17,6	22,5	23,9	26,6
❹	Absorbed power	kW	5,81	6,62	8,14	9,45	10,11
❹	E.E.R.		2,67	2,66	2,75	2,53	2,63
❺	Sound pressure	dB(A)	50	50	52	52	53
❺	Silenced setup sound pressure	dB(A)	46	46	49	49	50
	Scroll compressors/steps	no.	1/1	1/1	1/1	1/1	1/1
	Buffer tank water content	l	35	35	45	45	45
❹	P0 circulator/P1 electric pump nominal available head	kPa	75/155	64/136	66/131	68/130	63/120
	Electrical supply	V-ph-Hz	400-3+N-50	400-3+N-50	400-3+N-50	400-3+N-50	400-3+N-50
	DIMENSIONS AND WEIGHT		**115**	**117**	**122**	**124**	**127**
	L - PUMP width	mm	1230	1230	1230	1230	1535
	L - TANK&PUMP width	mm	1522	1522	1522	1522	1822
	H - Height	mm	1090	1090	1280	1280	1510
	P - Depth	mm	580	580	600	600	695
❻	Weight	kg	215	225	278	288	350

Data at the following conditions:
❶ Air: 7°C D.B. - 6°C W.B. - Water: 40/45°C.
❷ Air: 7°C D.B. - 6°C W.B. - Water: 30/35°C.
❸ Air: -7°C D.B. - Water: 30/35°C.
❹ Air: 35°C D.B. - Water: 12/7°C.
❺ In open field (Q = 2) at 5 m from the unit.
❻ Weight refers to the most complete setup.
Performance according to EN 14511. Setup with circulator.
Important note:
- With circulator (P0/ASP0 setup) the units are not suitable for radiant cooling operation.
- Permissible heat exchanger thermal gradient ΔT = 4-8°C.

	SEASONAL ENERGY PERFORMANCE		115	117	122	124	127
	THAETY NF MODEL SEASONAL PERFORMANCE IN HEATING MODE						
③	Pdesignh (EN 14825)	kW	18	18	24	27	32
③	SCOP (EN 14825)		3,62	3,74	3,72	3,74	3,68
④	η_s	%	142	146	146	146	144
④	Energy class		A+	A+	A+	A+	A+

③ In Average climatic conditions, low temperature application (35°C)
④ Seasonal energy efficiency: low temperature heating in Average climate (EU Regulations No.811/2013 and No.813/2013)

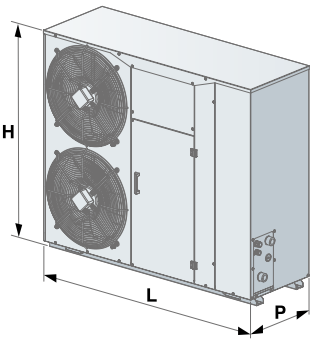

Compact-Y SM

THAEY 122÷130

Cooling capacity:
22,7÷29 kW

Heating capacity:
23,5÷34 kW

KEY FEATURES

- **Plug&Play unit with integrated hydraulic module**
- **Integrated MASTER/SLAVE control**

Packaged reversible air-cooled heat pumps with axial fans. Range with scroll hermetic compressors and R410A refrigerant gas.

CONSTRUCTION FEATURES

- Compressor: hermetic, rotary scroll compressor, complete with thermal protection and casing heater for mod. 127-130.
- Water side heat exchanger: adequately insulated stainless steel plates, complete with antifreeze heater and water flow differential pressure switch.
- Air side heat exchanger: finned coil with copper pipes and aluminium fins, complete with protection grilles.
- Fan: external rotor axial type electric fans equipped with internal thermal protection and accident protection grilles.
- Control: microprocessor electronic control with Adaptive Function Plus logic.
- Structure: in galvanised and painted steel plate, complete with condensate drain pan.
- The unit is also complete with:
  - outdoor air temperature probe for compensation of the Set-point;
  - display of cooling circuit high and low pressure;
  - Master/Slave control up to 4 units in parallel;
  - clock board.

MODELS

- THAEY: heat pump unit.

PUMP SET-UP

- Pump unit complete with: circulator or electric circulation pump, membrane expansion tank, manual air vent valve, safety valve and pressure gauge.

TANK & PUMP SET UP

- Pump unit complete with: inertial buffer tank, circulator or electric circulation pump, membrane expansion tank, manual air vent valve, automatic air vent valve, safety valve, and pressure gauge.

FACTORY FITTED ACCESSORIES

- Soft-start device.
- Silenced set up.
- Condensing control.
- Antifreeze heater on the buffer tank.
- Compressor casing heater (mod. 122).
- Unit base antifreeze heater for operation in heat pump mode at low outdoor air temperatures.
- Digital input for double set-point
- 4-20 mA analogue signal for shifting set-point.
- Low water set-point temperature.
- Pre-painted copper/coils or copper/copper coils.

SEPARATELY SUPPLIED ACCESSORIES

- Rubber anti-vibration mounts.
- Condensing control.
- Water filter.
- 3-way valve for the production of domestic hot water.
- Outdoor air temperature probe for set-point compensation.
- Additional electrical resistance for heat pump, managed by regulation.
- Remote keypad with display.
- Interfaces for serial communication with other devices.
- Serial converter (RS485/USB).
- Rhoss supervisors for unit monitoring and remote management.

Features

	THAEY MODEL		122	127	130
❶	Heating capacity	kW	23,5	30,3	34
❶	Absorbed power	kW	7,94	10,13	11,26
❶	C.O.P.		2,96	2,99	3,02
❷	Heating capacity	kW	24	30,9	34,5
❷	C.O.P.		3,75	3,74	3,72
❸	Cooling capacity	kW	22,7	26,7	29
❸	Absorbed power	kW	7,99	10,23	11,84
❸	E.E.R.		2,84	2,61	2,45
❹	Sound pressure	dB(A)	52	53	53
❹	Silenced setup sound pressure	dB(A)	49	50	50
	Scroll compressors/steps	n.	1/1	1/1	1/1
	Circuits	no.	1	1	1
	Buffer tank water content	l	45	45	45
❸	Circulator/standard electric pump nominal available head	kPa	65/131	64/121	55/112
	Electrical supply	V-ph-Hz	400-3+N-50	400-3+N-50	400-3+N-50
	DIMENSIONS AND WEIGHT		**122**	**127**	**130**
	L - PUMP width	mm	1230	1535	1535
	W - TANK & PUMP width	mm	1522	1822	1822
	H - Height	mm	1280	1510	1510
	P - Depth	mm	600	695	695
❺	THAEY weight	kg	278	350	380

Data at the following conditions:
❶ Air: 7°C D.B. - 6°C W.B. - Water: 40/45°C.
❷ Air: 7°C D.B. - 6°C W.B. - Water: 30/35°C.
❸ Air: 35°C - Water: 12/7°C.
❹ In open field (Q = 2) at 5 m from the unit.
❺ Weight refers to the most complete setup.
Performance according to EN 14511. Setup with electric pump.

	SEASONAL ENERGY PERFORMANCE		122	127	130
	THAEY MODEL SEASONAL PERFORMANCE IN HEATING MODE				
③	Pdesignh (EN 14825)	kW	24	32	36
③	SCOP (EN 14825)		3,21	3,21	3,2
④	η_s	%	125	125	125
④	Energy class		A+	A+	A+

③ In Average climatic conditions, low temperature application (35°C)
④ Seasonal energy efficiency: low temperature heating in Average climate (EU Regulations No.811/2013 and No.813/2013)

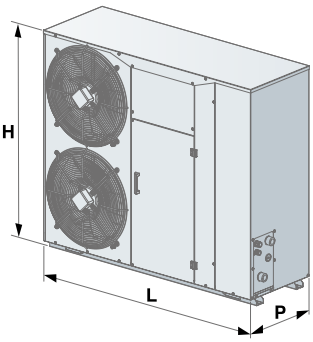

Compact-Y MD

TCAEY 238÷265 / THAEY 233÷265

Cooling capacity:
32,3÷64,6 kW

Heating capacity:
37,8÷68,3 kW

Water chillers and packaged reversible air-cooled heat pumps with axial fans. Range with scroll hermetic compressors and R410A refrigerant gas.

KEY FEATURES

- **3 capacity steps (mod. 245-265)**
- **HT65 version for 65°C water production (°)**

CONSTRUCTION FEATURES

- Compressor: hermetic, rotary scroll type, complete with thermal protection and casing heater. 3 capacity steps with high efficiency at partial loads for models 245-265.
- Water side heat exchanger: adequately insulated stainless steel plates, complete with antifreeze heater and water flow differential pressure switch.
- Air side heat exchanger: finned coil with copper pipes and aluminium fins, complete with protection grilles.
- Fan: external rotor helical type electric fan equipped with internal thermal protection, accident protection grilles and proportional electronic device for continuous fan speed regulation.
- Control: microprocessor electronic control with Adaptive Function Plus logic.
- Structure: made of galvanised and painted sheet steel.
- The unit is also complete with:
  - Master/Slave control up to 4 units in parallel;
  - clock board.

MODELS

- TCAEY: unit designed for cooling only.
- THAEY: heat pump unit.

PUMP SET-UP

- Pump unit complete circulator, single or double electric pump, including an automatic actuation pump in standby (mod. 245-265), expansion tank, air bleed valves, safety valve and water side pressure gauge.

TANK&PUMP SET UP

- Pump unit complete inertial buffer tank, circulator, single or double electric pump, including an automatic actuation pump in standby (mod. 245-265), expansion tank, air bleed valves, safety valve and water side pressure gauge.

FACTORY FITTED ACCESSORIES

- Soft-start device.
- Silenced set up.
- Desuperheater.
- 100% heat recovery unit.
- Condensing control with fans with EC motor.
- Refrigerant circuit high and low pressure gauges (mod. 245-265).
- Buffer tank antifreeze heater.
- Electric pump antifreeze heater (mod. 245-265).
- Forced limit of power consumption.
- Refrigerant leak detector.
- Digital input for double set-point
- 4-20 mA analogue signal for shifting set-point.
- Energy parameter measuring device.
- Low water set-point temperature.
- Pre-painted copper/coils or copper/copper coils.

SEPARATELY SUPPLIED ACCESSORIES

- Outdoor air temperature probe for set-point compensation.
- Additional electrical resistance for heat pump, managed by regulation.
- Rubber anti-vibration mounts.
- Water filter.
- Remote keypad with display.
- Interfaces for serial communication with other devices.
- Serial converter (RS485/USB).
- Rhoss supervisors for unit monitoring and remote management.

Features

COOL · COOL HEAT · COMPRESSOR SCROLL · GAS R410A · OUTDOOR · ADAPTIVE FUNCTION PLUS · EUROVENT CERTIFIED PERFORMANCE www.eurovent-certification.com

	TCAEY MODEL (P1 set up)		233	238	245	250	260	265
❶	Cooling capacity	kW	-	39,4	44,8	51,9	59,8	64,6
❶	Absorbed power	kW	-	12,83	17,43	19,73	22,15	24,01
❶	E.E.R.		-	3,07	2,57	2,63	2,7	2,65
	THAEY MODEL							
❷	Heating capacity	kW	37,8	42,1	48,1	56,2	62,6	68,3
❷	Absorbed power	kW	12,54	13,19	16,82	18,97	20,86	23,71
❷	C.O.P.		3,01	3,19	2,86	2,96	3	2,88
❶	Cooling capacity		32,3	38,5	42,3	50,3	57,8	61,6
❶	E.E.R.		2,59	2,95	2,49	2,68	2,64	2,54
	TCAEY-THAEY MODEL		**233**	**238**	**245**	**250**	**260**	**265**
❸	Sound pressure	dB(A)	54	54	56	56	57	57
❸	Silenced setup sound pressure	dB(A)	51	51	53	53	54	54
	Scroll compressors/steps	n.	2/2	2/2	2/3	2/3	2/3	2/3
	Circuits	no.	1	1	1	1	1	1
	Buffer tank water content (TANK&PUMP)	l	80	150	150	150	150	150
❶	Available nominal head of standard electric pump (TCAEY)	kPa	106	87	113	102	87	74
	Electrical supply	V-ph-Hz	400-3+N-50	400-3+N-50	400-3+N-50	400-3+N-50	400-3+N-50	400-3+N-50
	DIMENSIONS AND WEIGHTS		**233**	**238**	**245**	**250**	**260**	**265**
	L - Width	mm	1710	2315	2315	2315	2315	2315
	H - Height	mm	1570	1570	1570	1570	1570	1570
	P - Depth	mm	1000	1000	1000	1000	1000	1000
❹	TCAEY weight	kg	-	645	740	775	795	835
❹	THAEY weight	kg	500	660	760	795	815	855

Data at the following conditions:
❶ Air: 35°C - Water: 12/7°C.
❷ Air: 7°C D.B. - 6°C W.B. - Water: 40/45°C.
❸ In open field (Q = 2) at 5 m from the unit.
❹ Weight refers to the most complete set up.
Performance according to EN 14511

	SEASONAL ENERGY PERFORMANCE		233	238	245	250	260	265
	TCAEY MODEL SEASONAL PERFORMANCE IN COOLING MODE (P1 set up)							
①	Pdesignc (EN 14825)	kW	-	39,4	44,8	51,9	59,8	64,6
①	SEER (EN 14825)		-	4,26	4,24	4,35	4,31	4,27
②	$\eta_{s,c}$	%	-	167	167	171	170	168
	THAEY MODEL SEASONAL PERFORMANCE IN HEATING MODE							
③	Pdesignh (EN 14825)	kW	36	41	49	56	62	70
③	SCOP (EN 14825)		3,72	3,72	3,61	3,58	3,56	3,66
④	η_s	%	146	146	141	140	140	144
④	Energy class		A+	A+	A+	A+	A+	A+

① Low temperature application (7°C)
② Seasonal energy efficiency: low temperature cooling (EU Regulation 2016/2281)
③ In Average climatic conditions, low temperature application (35°C)
④ Seasonal energy efficiency: low temperature heating in Average climate (EU Regulations No.811/2013 and No.813/2013)

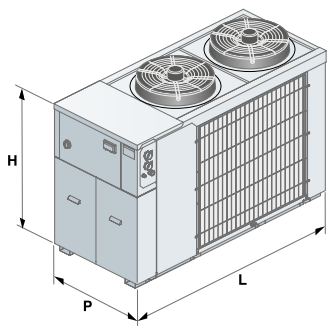

POKER

THAETY 234 H.T.

Cooling capacity:
28,8÷115,2 kW

Heating capacity:
33,8÷135,2 kW

Modular reversible heat pumps for high temperature water production, air cooled with axial fans. Range with scroll hermetic compressors and R410A refrigerant gas.

KEY FEATURES

- **Modular range: up to 4 units may be combined**
- **Total system redundancy with multiple modules installed**
- **Cascade management including DHW with multiple modules installed**
- **Hot water production from -20°C to 40°C outdoor air**
- **Temperature of the produced water up to 60°C**

CONSTRUCTION FEATURES

- Compressors: hermetic scroll type rotary compressors with steam injection, thermal protection and casing heater.
- Water side heat exchanger: adequately insulated stainless steel plates, complete with antifreeze heater and water flow differential pressure switch.
- Air side heat exchanger: finned coil heat exchanger, with copper pipes and aluminium fins with hydrophilic treatment.
- Fan: external rotor helical type electric fan and permanent magnet motor (EC brushless) for electronic speed control, equipped with internal thermal protection and accident protection grilles.
- Control: microprocessor electronic control with Adaptive Function Plus logic.
- Structure: suitably sound-proofed, galvanised and painted steel plate, complete with antifreeze heater on the condensate drain pan.
- The unit is also complete with:
  - outdoor air temperature probe for set-point compensation;
  - display of cooling circuit high and low pressure;
  - clock board.

VERSION

T - High efficiency/temperature version.

SET UPS

- PUMP P1 - Unit complete with: electric circulation pump and manual air vent valve.
- PUMP P1 V3V - Unit complete with: electric circulation pump, manual air vent valve, 3-way diverter valve for the production of domestic hot water.
- PUMP P1 DS - Unit complete with: electric circulation pump to the main heat exchanger, manual air vent valve and desuperheater complete with antifreeze heater.

SEPARATELY SOLD KITS ARE COMPULSORY

- Remote keypad with back-lit LCD display, which can be wall-mounted or installed on the machine.
- Side buffer panels.

SEPARATELY SOLD KITS ARE MANDATORY

when multiple modules are installed in parallel
- Connection hoses between modules.
- Panels and telephone cables for module connection.

FACTORY FITTED ACCESSORIES

- Forced Download. Compressor partialisation or switch-off to limit power and current consumption (digital input). When multiple modules are connected in parallel, a KCSC accessory must be purchased in order to enable this signal.
- Set up with oversized head pump.
- Soft-Start device.
- Unit with copper/pre-painted aluminium or copper/copper condensation coils.
- Flow switch and hot wire heaters protecting pump and piping down to -20°C outdoor air.
- Silenced set up (muffled compressors).
- Cooling circuit high and low pressure gauges.
- Digital input for double set-point.
- 4-20 mA analogue signal for shifting set-point.

SEPARATELY SUPPLIED ACCESSORIES

- Digital input and output concentrator (KCSC).
- Rubber anti-vibration mounts.
- Water filter.
- Right-hand connection kit.
- 3-way diverter valve to manage the production of domestic hot water complete with protective casing and hoses for machine connection. For downstream installation of the group of machines. Not compatible with PUMP V3V set up.
- Additional electrical resistance for heat pump managed by regulation.
- Interfaces for serial communication with other devices.
- Serial converter (RS485/USB).
- Rhoss supervisors for unit monitoring and remote management.

Features

COOL HEAT · SCROLL COMPRESSOR · GAS R410A · OUTDOOR · ADAPTIVE FUNCTION PLUS · EUROVENT CERTIFIED PERFORMANCE www.eurovent-certification.com

	THAETY H.T. MODEL		234			
			1 mod.	2 mod.	3 mod.	4 mod.
❶	Heating capacity	kW	33,8	67,6	101,4	135,2
❶	Absorbed power	kW	9,85	19,71	29,56	39,42
❶	C.O.P.		3,42	3,42	3,42	3,42
❷	Heating capacity	kW	23,49	46,98	70,47	93,96
❷	Absorbed power	kW	9,83	19,66	29,48	39,31
❷	C.O.P.		2,39	2,39	2,39	2,39
❸	Heating capacity	kW	33,9	67,88	101,82	135,76
❸	Absorbed power	kW	8,11	16,24	24,36	32,48
❸	C.O.P.		4,18	4,18	4,18	4,18
❹	Cooling capacity	kW	28,8	57,6	86,4	115,2
❹	E.E.R.		2,93	2,93	2,93	2,93
❺	Sound pressure	dB(A)	43	46	47	48
❺	Silenced setup sound pressure	dB(A)	41	44	45	46
	Scroll compressors/steps	no.	2/2	4/4	6/6	8/8
❹	Electric pump nominal available head	kPa	137	137	137	137
	Electrical supply	V-ph-Hz	400-3-50	400-3-50	400-3-50	400-3-50
	DIMENSIONS AND WEIGHTS		**1 mod.**	**2 mod.**	**3 mod.**	**4 mod.**
	L - Width	mm	1297	2541	3785	5029
	H - Height	mm	2152	2152	2152	2152
	P - Depth	mm	1224	1224	1224	1224
❻	Weight	kg		510 (1 mod.)		

Data at the following conditions:
❶ Air: 7°C D.B. - 6°C W.B. - Water: 40/45°C.
❷ Air: -7°C D.B. - Water: 40/45°C.
❸ Air: 7°C D.B. - 6°C W.B. - Water: 30/35°C.
❹ Air: 35°C D.B. - Water: 12/7°C.
❺ In open field (Q = 2) at 10 m from the unit.
❻ Weight refers to P1 DS setup.
Performance according to EN 14511

	SEASONAL ENERGY PERFORMANCE		234			
			1 mod.	2 mod.	3 mod.	4 mod.
	THAETY H.T. MODEL SEASONAL PERFORMANCE IN HEATING MODE - Low temperature application 35°C					
③	Pdesignh (EN 14825)	kW	32	65	98	131
③	SCOP (EN 14825)		3,94	4	4,05	4,12
④	η_s	%	155	157	159	162
④	Energy class		A++	A++	-	-
	THAETY H.T. MODEL SEASONAL PERFORMANCE IN HEATING MODE - Medium temperature application 55°C					
③	Pdesignh (EN 14825)	kW	33	66	99	131
③	SCOP (EN 14825)		3,09	3,14	3,21	3,28
④	η_s	%	121	123	125	128
④	Energy class		A+	A+	-	-

③ In Average climatic conditions
④ Seasonal energy efficiency: heating in Average climate (EU Regulations No.811/2013 and No.813/2013)

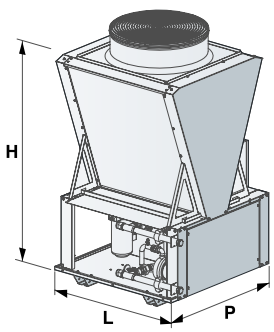

EasyPACK ECO

TCAEI-THAEI 270÷2150

Cooling capacity:
69,4÷153,7 kW

Heating capacity:
75,2÷152,3 kW

THAETI 285 with coil protection metal filters accessory

Water chillers and packaged reversible air-cooled heat pumps with axial fans. Range with hermetic scroll compressors and R32 refrigerant.

KEY FEATURES

- **Efficient and eco-friendly range in R32**
- **Full optional unit**
- **Integrated MASTER/SLAVE control**
- **Partial heat recovery with pump and mixing valve**

CONSTRUCTION FEATURES

- Compressor: scroll type, rotary, hermetic complete with thermal protection and casing heater.
- 3 capacity steps with high efficiency at partial loads.
- Water side heat exchanger: with stainless steel plates, complete with closed cell polyurethane foam rubber insulation and water flow differential pressure switch.
- Air side heat exchanger: featuring micro-channels (TCAEI) or finned coil with copper pipes and aluminium fins (THAEI).
- Fan: external rotor axial type electric fans equipped with internal thermal protection, accident protection grilles and proportional electronic device for continuous fan rotation speed regulation.
- Control: microprocessor electronic control with Adaptive Function Plus logic.
- Structure: load-bearing structure made of galvanised and painted steel plate with polyester powder coating.
- The unit is also complete with:
  - compressor and fan circuit breaker switches;
  - electronic expansion valve;
  - display of cooling circuit high and low pressure;
  - Master/Slave control up to 4 units in parallel;
  - clock board;
  - control of Variable Primary Flow (VPF_R).

VERSIONS

- T - High efficiency version with oversized condensing section (TCAETI-THAETI).
- Q - Super-silenced version complete with compressor technical compartment soundproofing, reduced speed fans and oversized condensing section (TCAEQI-THAEQI).

MODELS

- TCAETI: high efficiency unit designed for cooling only.
- TCAEQI: super silenced unit designed for cooling only.
- THAETI: heat pump unit.
- THAEQI: super silenced heat pump unit.

FACTORY FITTED ACCESSORIES

- PUMP with single or double electric pump, one of which automatic in standby. The electric pumps are available in the low or high head versions.
- TANK&PUMP with 230 - 440 litre integrated buffer tank (depending on the sizes) and single or double electric pump, complete with expansion tank, air vent valves, safety valve and water side pressure gauge.
- Inverter pump control for unit start-up.
- Desuperheater.
- Desuperheater with pump and mixing valve
- 100% heat recovery unit (TCAEI)
- Condensing control with fans with EC motor (fitted as standard in TCAEQI-THAEQI 270-285).
- Condensing control with over-pressure fans (T version only)
- Power factor correction capacitors (cosϕ > 0.94).
- Forced limit of power consumption.
- Forced noise limit.
- Energy parameter measuring device.
- Soft starter.
- Technical compressor compartment soundproofing.
- Compressor soundproof enclosures.
- Cooling circuit outlet and inlet valves (TCAETI-TCAEQI).
- Cooling circuit outlet valves (THAETI-THAEQI).
- Refrigerant leak detector.
- Cooling circuit high and low pressure gauges.
- Double safety valves.
- Metal filters or coil protection nets.
- Microchannel coils with E-coating treatment, copper/copper, copper/aluminium, pre-painted copper/aluminium or with hydrophilic treatment depending on versions.
- Control of min/max power supply voltage and backup battery
- Digital input for double set-point.
- 4-20 mA analogue signal for shifting set-point.
- Evaporator antifreeze heater, electrical panel, buffer tank, electric pumps and heat exchangers for heat recovery, if applicable, and base.
- Low temperature water production.
- Interfaces for serial communication with other devices.
- Rubber anti-vibration mounts.

SEPARATELY SUPPLIED ACCESSORIES

- Remote keypad with display.
- Thermostat with display.
- Rhoss supervisors for unit monitoring and remote management.
- Rhoss sequencer for integrated management of multiple chillers.

Features

COOL · COOL HEAT · PATENT PENDING · SCROLL COMPRESSOR · LOW GWP · GAS R32 · OUTDOOR · ADAPTIVE FUNCTION PLUS · EUROVENT CERTIFIED PERFORMANCE www.eurovent-certification.com

	TCAETI-TCAEQI MODEL		270	285	2100	2110	2120	2140	2150
❶	Nominal cooling capacity	kW	74,1	88,6	101	110,5	121,7	140,8	153,7
❶	Nominal cooling capacity	kW	72,5	85,8	98,5	108	119,3	137,6	149,5
❶	E.E.R.		3,15	3,11	3,26	3,18	3,27	3,18	3,13
❶	E.E.R.		3,04	2,95	3,14	3,06	3,15	3,06	2,97
❶	Absorbed power	kW	23,5	28,5	30,98	34,75	37,22	44,28	49,11
❶	Absorbed power	kW	23,85	29,08	31,37	35,29	37,87	44,97	50,34
	THAETI-THAEQI MODEL		**270**	**285**	**2100**	**2110**	**2120**	**2140**	**2150**
❷	Nominal heating capacity	kW	76,1	89,4	100,3	109,1	123	139,4	152,3
❷	Nominal heating capacity	kW	75,2	88	98,2	106,6	121,2	138,9	150,1
❷	C.O.P.		3,23	3,25	3,31	3,25	3,28	3,25	3,26
❷	C.O.P.		3,27	3,25	3,32	3,25	3,33	3,32	3,29
❶	Nominal cooling capacity	kW	71	83,8	96,1	105,6	117	133,7	146,1
❶	Nominal cooling capacity	kW	69,4	81,9	93,5	101,1	113,8	130,6	141,7
❷	Absorbed power	kW	23,56	27,51	30,3	33,57	37,5	42,89	46,72
❷	Absorbed power	kW	23	27,08	29,58	32,8	36,4	41,84	45,62
	TCAEI-THAEI MODEL		**270**	**285**	**2100**	**2110**	**2120**	**2140**	**2150**
❸	TCAETI-THAETI sound pressure	dB(A)	50	52	54	54	55	56	56
❸	TCAEQI-THAEQI sound pressure	dB(A)	44	46	47	47	49	50	50
❹	TCAETI-THAETI sound power	dB(A)	82	84	85,5	86	87	88	88
❹	TCAEQI-THAEQI sound power	dB(A)	76	78	79	79	81	82	82
	Scroll compressors/steps	n.	2/3	2/3	2/3	2/3	2/3	2/3	2/3
	Circuits	n.	1	1	1	1	1	1	1
	Electrical supply	V-ph-Hz	400-3+N-50	400-3+N-50	400-3+N-50	400-3+N-50	400-3+N-50	400-3+N-50	400-3+N-50
	DIMENSIONS AND WEIGHTS		**270**	**285**	**2100**	**2110**	**2120**	**2140**	**2150**
	L - Width	mm	3250	3250	3250	3250	3450	3450	3450
	TCAETI-THAETI H - Height	mm	1700	1700	1800	1800	2000	2000	2000
	TCAEQI-THAEQI H - Height	mm	1540	1540	1800	1800	2000	2000	2000
	P - Depth	mm	1210	1210	1210	1210	1520	1520	1520
❺	TCAETI weight	kg	795	825	875	880	1065	1165	1170
❺	THAETI weight	kg	885	915	965	970	1170	1270	1275

Data at the following conditions:
❶ Air: 35°C - Water: 12/7°C
❷ Air: 7°C, D.B. - 6°C W.B.- Water: 40/45°C.
❸ In open field (Q = 2) at 10 m from the unit.
❹ Total sound power level in dB(A) based on measurements carried out in accordance with regulation UNI EN-ISO 9614.
❺ Weight referred to the unit without load and not accessorised.
TCAEQI-THAEQI super-silenced versions.
Performance according to EN 14511.

	SEASONAL ENERGY PERFORMANCE		270	285	2100	2110	2120	2140	2150
	TCAETI MODEL SEASONAL PERFORMANCE IN COOLING MODE								
①	Pdesignc (EN 14825)	kW	74,1	88,6	101	110,5	121,7	140,8	153,7
①	SEER (EN 14825)		4,5	4,47	4,63	4,62	4,55	4,58	4,49
②	$\eta_{s,c}$	%	177	176	182	182	179	180	177
	TCAEQI MODEL SEASONAL PERFORMANCE IN COOLING MODE								
①	Pdesignc (EN 14825)	kW	72,5	85,8	98,5	108	119,3	137,6	149,5
①	SEER (EN 14825)		4,45	4,39	4,46	4,45	4,4	4,4	4,29
②	$\eta_{s,c}$	%	175	173	175	175	173	173	169
	THAETI MODEL SEASONAL ENERGY PERFORMANCE IN HEATING MODE								
③	Pdesignh (EN 14825)	kW	56	66	80	87	98	112	122
③	SCOP (EN 14825)		4,08	4,14	4,11	4,12	4	4,12	4,07
④	η_s	%	160	163	161	162	157	162	160
④	Energy class		A++	A++	-	-	-	-	
	THAEQI MODEL SEASONAL ENERGY PERFORMANCE IN HEATING MODE								
③	Pdesignh (EN 14825)	kW	60	70	78	85	96	111	120
③	SCOP (EN 14825)		4,13	4,19	4,09	4,03	3,99	4,08	4,04
④	η_s	%	162	164	161	158	156	160	159
④	Energy class		A++	A++	-	-	-	-	-

① Low temperature application (7°C)
② Seasonal energy efficiency: low temperature cooling (EU Regulation 2016/2281)
③ In Average climatic conditions, low temperature application (35°C)
④ Seasonal energy efficiency: low temperature heating in Average climate (EU Regulations No.811/2013 and No.813/2013)

EasyPACK

TCAEY-THAEY 269÷2146

Cooling capacity:
63,7÷144,4 kW

Heating capacity:
70,3÷151,7 kW

TCAETY 289 with coil protection metal filters accessory

KEY FEATURES

- **Complete and flexible range of accessories and set-ups**
- **Multi-purpose for systems with 2 pipes+DHW (with optional RC100)**
- **Integrated MASTER/SLAVE control**
- **HT65 version for 65°C water production (°)**

Water chillers and packaged reversible air-cooled heat pumps with axial fans. Range with scroll hermetic compressors and R410A refrigerant.

CONSTRUCTION FEATURES

- Compressor: scroll type, rotary, hermetic complete with thermal protection and casing heater.
- 3 capacity steps with high efficiency at partial loads.
- Water side heat exchanger: with stainless steel plates, complete with closed cell polyurethane foam rubber insulation and water flow differential pressure switch.
- Air side heat exchanger: featuring micro-channels or finned coil with copper pipes and aluminium fins depending on models/sizes.
- Fan: external rotor axial type electric fans equipped with internal thermal protection and accident protection grilles. The electric fans, based on the versions, are fitted with a proportional electronic device for continuous regulation of the rotation speed of the fans.
- Control: microprocessor electronic control with Adaptive Function Plus logic.
- Structure: load-bearing structure made of galvanised and painted steel plate with polyester powder coating.
- The unit is also complete with:
  - fan and compressor circuit breaker switches;
  - display of cooling circuit high and low pressure;
  - Master/Slave control up to 4 units in parallel;
  - clock board;
  - control of Variable Primary Flow (VPF_R).

VERSIONS

- B - Standard version (TCAEBY).
- T - High efficiency version with oversized condensing section (TCAETY-THAETY).
- S - Silenced version complete with compressor compartment soundproofing, reduced speed fans, and oversized condensing section (TCAESY-THAESY).
- Q - Super-silenced version complete with compressor technical compartment soundproofing, super-reduced speed fans and oversized condensing section (TCAEQY-THAEQY).

MODELS

- TCAEBY: standard unit designed for cooling only.
- TCAETY: high efficiency unit designed for cooling only.
- TCAESY: silenced unit designed for cooling only.
- TCAEQY: super silenced unit designed for cooling only.
- THAETY: heat pump unit.
- THAESY: silenced heat pump unit.
- THAEQY: super silenced heat pump unit.

FACTORY FITTED ACCESSORIES

- Shell and tube evaporator.
- PUMP with single or double electric pump, one of which automatic in standby. The electric pumps are available in the low or high head versions.
- TANK&PUMP with 230 to 440 litre integrated buffer tank (depending on models) and single or double electric pump, complete with expansion tank, air vent valves, safety valve, and water side pressure gauge.
- Inverter pump control for unit start-up.
- Desuperheater.
- 100% heat recovery unit
- Electronic expansion valve.
- Condensing control (standard in B-S-Q versions).
- Condensing control with fans with EC motor.
- Condensing control with over-pressure fans (B-T version only)
- Power factor correction capacitors (cosϕ > 0.94).
- Forced limit of power consumption.
- Forced noise limit.
- Energy parameter measuring device.
- Optimised energy efficiency.
- Soft starter.
- Technical compartment soundproofing.
- Compressor soundproof enclosures.
- Cooling circuit outlet and inlet valves.
- Refrigerant leak detector.
- Cooling circuit high and low pressure gauges.
- Double safety valves.
- Metal filters or coil protection nets.
- Microchannel coils with E-coating treatment, copper/copper or pre-painted copper/aluminium depending on the versions.
- Control of min/max power supply voltage.
- Digital input for double set-point.

Features

TCAEBY 269

- 4-20 mA analogue signal for shifting set-point.
- Evaporator antifreeze heater, electrical panel, buffer tank, electric pumps and heat exchangers for heat recovery, if applicable.
- Buffer tank integrative heaters.
- Low temperature water production.
- Interfaces for serial communication with other devices.
- Rubber anti-vibration mounts.

SEPARATELY SUPPLIED ACCESSORIES

- Remote keypad with display.
- Thermostat with display.
- Rhoss supervisors for unit monitoring and remote management.
- Rhoss sequencer for integrated management of multiple chillers.

EasyPACK

TCAEY-THAEY 269÷2146

	TCAEBY MODEL		269	279	289	296	2112	2125	2146
❶	Nominal cooling capacity	kW	65,6	72,1	77,6	86,5	105,5	-	-
❶	E.E.R.		2,74	2,81	2,81	2,62	2,79	-	-
❶	Absorbed power	kW	23,94	25,66	27,62	33,02	37,81	-	-
	TCAETY-TCAESY-TCAEQY MODEL		**269**	**279**	**289**	**296**	**2112**	**2125**	**2146**
❶	Nominal cooling capacity	kW	69,2	79,1	90,1	96,1	112	125,5	144,4
❶	Nominal cooling capacity	kW	67,7	76,7	87,6	92,1	108	122	138,9
❶	Nominal cooling capacity	kW	64,7	71,2	84,6	89,6	101,1	116,5	131
❶	E.E.R.		3,12	3,18	3,12	3,11	3,1	3,12	3,12
❶	E.E.R.		2,92	3,05	2,95	2,92	2,94	2,99	2,94
❶	E.E.R.		2,82	2,72	2,8	2,72	2,53	2,72	2,59
❶	Absorbed power	kW	22,18	24,87	28,88	30,9	36,13	40,22	46,28
❶	Absorbed power	kW	23,18	25,15	29,69	31,54	36,73	40,8	47,24
❶	Absorbed power	kW	22,94	26,18	30,21	32,94	39,96	42,83	50,58
	THAETY-THAESY-THAEQY MODEL		**269**	**279**	**289**	**296**	**2112**	**2125**	**2146**
❷	Nominal heating capacity	kW	73,4	82,4	92,4	100,5	118,5	133,1	151,7
❷	Nominal heating capacity	kW	70,8	80,4	90,4	98	115	129,1	147,6
❷	Nominal heating capacity	kW	70,3	77,3	88,4	95,4	111	125,5	143,6
❷	C.O.P.		3,35	3,36	3,31	3,28	3,31	3,25	3,23
❷	C.O.P.		3,32	3,36	3,31	3,29	3,3	3,27	3,27
❷	C.O.P.		3,31	3,3	3,27	3,26	3,21	3,23	3,22
❶	Nominal cooling capacity	kW	67,2	76,7	86,6	93,6	107,5	121,5	139,4
❶	Nominal cooling capacity	kW	66,2	74,7	85,7	89,6	104,6	119	136,9
❶	Nominal cooling capacity	kW	63,7	69,7	82,7	86,6	99,1	112,1	128,5
❷	Absorbed power	kW	21,91	24,52	27,92	30,64	35,8	40,95	46,97
❷	Absorbed power	kW	21,33	23,93	27,31	29,79	34,85	39,48	45,14
❷	Absorbed power	kW	21,24	23,42	27,03	29,26	34,58	38,85	44,6
	TCAEY-THAEY MODEL		**269**	**279**	**289**	**296**	**2112**	**2125**	**2146**
❸	TCAEBY sound pressure	dB(A)	50	50	50	50	52	-	-
❸	TCAETY-THAETY sound pressure	dB(A)	50	51	51	51	53	54	54
❸	TCAESY-THAESY sound pressure	dB(A)	46	47	47	47	49	50	50
❸	TCAEQY-THAEQY sound pressure	dB(A)	42	42	43	43	46	47	47
❹	TCAEBY sound power	dB(A)	82	82	82	82	84	-	-
❹	TCAETY-THAETY sound power	dB(A)	82	83	83	83	85	86	86
❹	TCAESY-THAESY sound power	dB(A)	78	79	79	79	81	82	82
❹	TCAEQY-THAEQY sound power	dB(A)	74	74	75	75	78	79	79
	Scroll compressors/steps	n.	2/3	2/3	2/3	2/3	2/3	2/3	2/3
	Circuits	n.	1	1	1	1	1	1	1
	Electrical supply	V-ph-Hz	400-3+N-50	400-3+N-50	400-3+N-50	400-3+N-50	400-3+N-50	400-3+N-50	400-3+N-50
	DIMENSIONS AND WEIGHT		**269**	**279**	**289**	**296**	**2112**	**2125**	**269**
	W - Width of version B	mm	2650	2650	2650	2650	3250	-	-
	W - Width of version T - S - Q	mm	3250	3250	3250	3250	3450	3450	3450
	H - Height of version B	mm	1700	1700	1700	1700	1700	-	-
	H - Height of version T - S	mm	1700	1700	1700	1700	2000	2000	2000
	H - Height of version Q	mm	1520	1520	1520	1520	2000	2000	2000
	D - Depth of version B	mm	1210	1210	1210	1210	1210	-	-
	D - Depth of version T - S - Q	mm	1210	1210	1210	1210	1520	1520	1520
❺	TCAEBY weight	kg	755	760	795	800	980	-	-
❺	TCAETY weight	kg	850	865	870	905	1160	1195	1255
❺	THAETY weight	kg	915	930	935	980	1240	1280	1355

Data at the following conditions:
❶ Air: 35°C - Water: 12/7°C
❷ Air: 7°C, D.B. - 6°C W.B.- Water: 40/45°C.
❸ In open field (Q = 2) at 10 m from the unit.
❹ Total sound power level in dB(A) based on measurements carried out in accordance with regulation UNI EN-ISO 9614.
❺ Weight referred to the unit without load and not accessorised.
TCAESY-THAESY silenced versions.
TCAEQY-THAEQY super-silenced versions.
Performance according to EN 14511.

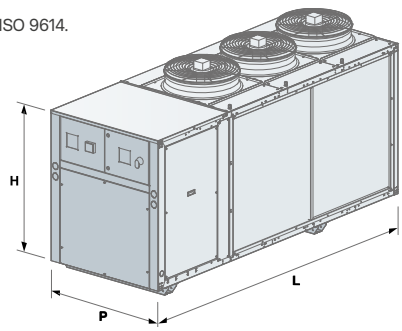

	SEASONAL ENERGY PERFORMANCE		269	279	289	296	2112	2125	2146
	TCAEBY MODEL SEASONAL PERFORMANCE IN COOLING MODE								
①	Pdesignc (EN 14825)	kW	65,6	72,1	77,6	86,5	105,5	-	-
①	SEER (EN 14825)		4,35	4,19	4,2	4,14	4,34	-	-
②	$\eta_{s,c}$	%	171	164	165	163	170	-	-
	TCAETY MODEL SEASONAL PERFORMANCE IN COOLING MODE								
①	Pdesignc (EN 14825)	kW	69,2	79,1	90,1	96,1	112	125,5	144,4
①	SEER (EN 14825)		4,43	4,35	4,45	4,48	4,46	4,41	4,44
②	$\eta_{s,c}$	%	174	171	175	176	175	173	175
	TCAESY MODEL SEASONAL PERFORMANCE IN COOLING MODE								
①	Pdesignc (EN 14825)	kW	67,7	76,7	87,6	92,1	108	122	138,9
①	SEER (EN 14825)		4,34	4,35	4,35	4,37	4,4	4,42	4,4
②	$\eta_{s,c}$	%	170	171	171	172	173	174	173
	TCAEQY MODEL SEASONAL PERFORMANCE IN COOLING MODE								
①	Pdesignc (EN 14825)	kW	64,7	71,2	84,6	89,6	101,1	116,5	131
①	SEER (EN 14825)		4,27	4,17	4,3	4,23	4,16	4,17	4,11
②	$\eta_{s,c}$	%	168	164	169	166	163	164	161
	THAETY MODEL SEASONAL ENERGY PERFORMANCE IN HEATING MODE								
③	Pdesignh (EN 14825)	kW	53	60	67	91	108	121	138
③	SCOP (EN 14825)		4,07	4,04	3,99	3,9	4,03	3,9	3,87
④	η_s	%	160	159	156	153	158	153	152
④	Energy class		A++	A++	A++	-	-	-	-
	THAESY MODEL SEASONAL ENERGY PERFORMANCE IN HEATING MODE								
③	Pdesignh (EN 14825)	kW	51	58	66	89	104	117	134
③	SCOP (EN 14825)		4,05	4,08	4	3,93	4,02	3,96	3,93
④	η_s	%	159	160	157	154	158	155	154
④	Energy class		A++	A++	A++	-	-	-	-
	THAEQY MODEL SEASONAL ENERGY PERFORMANCE IN HEATING MODE								
③	Pdesignh (EN 14825)	kW	51	56	65	69	100	114	130
③	SCOP (EN 14825)		4,06	4,04	3,99	3,99	3,93	3,92	3,88
④	η_s	%	159	159	157	157	154	154	152
④	Energy class		A++	A++	A++	A++	-	-	-

① Low temperature application (7°C)
② Seasonal energy efficiency: low temperature cooling (EU Regulation 2016/2281)
③ In Average climatic conditions, low temperature application (35°C)
④ Seasonal energy efficiency: low temperature heating in Average climate (EU Regulations No.811/2013 and No.813/2013)

NEW Web code: **WKE12**

WinPACK ECO

TCAEI-THAEI 2160÷4350

Cooling capacity: 147,7÷356,6 kW

Heating capacity: 159,3÷347,4 kW

TCAETI 4350 with BCI accessory

Water chillers and packaged reversible air-cooled heat pumps with axial fans. Series with scroll hermetic compressors and R32 refrigerant.

KEY FEATURES

- **Efficient and eco-friendly range in R32**
- **Full optional unit**
- **Compact units**
- **Integrated MASTER/SLAVE control**
- **Partial heat recovery with pump and mixing valve**

CONSTRUCTION FEATURES

- Compressor: scroll type, rotary, hermetic complete with thermal protection and casing heater.
- 3/4 capacity steps with high efficiency at partial loads.
- Water side heat exchanger: with stainless steel plates, complete with closed cell polyurethane foam rubber insulation and water flow differential pressure switch.
- Air side heat exchanger: featuring micro-channels (TCAEI) or finned coil with copper pipes and aluminium fins with hydrophilic treatment (THAEI).
- Fan: external rotor axial type electric fans equipped with internal thermal protection, accident protection grilles and proportional electronic device for continuous fan rotation speed adjustment.
- Control: microprocessor electronic control with Adaptive Function Plus logic.
- Structure: load-bearing structure made of galvanised and painted steel plate with polyester powder coating.
- The unit is also complete with:
  - compressor and fan circuit breaker switches;
  - electronic expansion valve;
  - display of cooling circuit high and low pressure;
  - Master/Slave control up to 4 units in parallel;
  - clock board;
  - control of Variable Primary Flow (VPF_R).

VERSIONS

- T - High efficiency version (TCAETI-THAETI).
- Q - Super silenced version complete with compressor technical compartment soundproofing and reduced speed fans (TCAEQI-THAEQI).

MODELS

- TCAETI: high efficiency unit designed for cooling only.
- TCAEQI: super silenced unit designed for cooling only.
- THAETI: heat pump unit.
- THAEQI: super silenced heat pump unit.

FACTORY FITTED ACCESSORIES

- PUMP with single or double electric pump, one of which automatic in standby. The electric pumps are available in the low or high head versions.
- TANK&PUMP with 360 - 700 litre integrated buffer tank (depending on the sizes) and single or double electric pump, complete with expansion tank, air vent valves, safety valve and water side pressure gauge.
- Inverter pump control for unit start-up.
- Desuperheater.
- Desuperheater with pump and mixing valve.
- 100% heat recovery unit (TCAEI).
- Condensing control with fans with EC motor.
- Condensing control with over-pressure fans (T version only).
- Power factor correction capacitors (cosϕ > 0.94).
- Forced limit of power consumption.
- Forced noise limit.
- Energy parameter measuring device.
- Soft starter.
- Soundproofed compressor box.
- Compressor soundproof enclosures.
- Cooling circuit outlet and intake valves (TCAETI-TCAEQI).
- Cooling circuit outlet valves (THAETI-THAEQI).
- Refrigerant leak detector.
- Gas control and refrigerant leak detector (leak detector plus).
- Cooling circuit high and low pressure gauges.
- Double safety valves.
- Coil protection grilles, lower compartment and rear buffer panels.
- Microchannel coils with E-coating treatment, copper/copper, copper/aluminium, pre-painted copper/aluminium depending on the versions.
- Control of min/max power supply voltage and backup battery.
- Digital input for double set-point.
- 4-20 mA analogue signal for shifting set-point.
- Evaporator antifreeze heater, electrical panel, buffer tank, electric pumps and heat exchangers for heat recovery, if applicable, and base.
- Low temperature water production.
- Interfaces for serial communication with other devices.
- Colour touch user keypad (fitted on the machine or remotely) with 7" display.
- Anti-vibration mounts.

SEPARATELY SUPPLIED ACCESSORIES

- Remote keypad with display.
- Thermostat with display.
- Rhoss supervisors for unit monitoring and remote management.
- Rhoss sequencer for integrated management of multiple chillers.

Features

COOL · COOL HEAT · PATENT PENDING · SCROLL COMPRESSOR · LOW GWP · GAS R32 · OUTDOOR · ADAPTIVE FUNCTION PLUS · EUROVENT CERTIFIED PERFORMANCE www.eurovent-certification.com

	TCAETI-TCAEQI MODEL		2160	2180	4180	4200	4220	4240	4280	4330	4350
❶	Nominal cooling capacity	kW	163,6	177,7	184,7	200,7	221,7	244,6	284,7	332,7	356,6
❶	Nominal cooling capacity	kW	156,7	166,7	176,7	191,7	207,6	228,7	275,7	317,7	336,7
❶	E.E.R.		3,13	3,11	3,2	3,13	3,12	3,1	3,17	3,14	3,11
❶	E.E.R.		2,95	2,87	3,06	2,95	2,86	2,81	3,03	2,94	2,87
❶	Absorbed power	kW	52,27	57,14	57,72	64,12	71,06	78,9	89,81	105,96	114,66
❶	Absorbed power	kW	53,12	58,08	57,75	64,98	72,59	81,39	90,99	108,06	117,32
	THAETI-THAEQI MODEL		**2160**	**2180**	**4180**	**4200**	**4220**	**4240**	**4280**	**4320**	**4350**
❷	Nominal heating capacity	kW	163,4	176,3	181,3	197,3	218,3	232,3	282,3	323,3	347,4
❷	Nominal heating capacity	kW	159,3	170,3	176,3	191,3	213,4	229,3	277,3	317,3	337,3
❷	C.O.P.		3,21	3,21	3,21	3,2	3,21	3,22	3,2	3,21	3,2
❷	C.O.P.		3,22	3,19	3,23	3,21	3,22	3,23	3,25	3,23	3,2
❶	Nominal cooling capacity	kW	153,7	163,6	173,8	188,7	208,6	229,7	268,7	309,7	332,7
❶	Nominal cooling capacity	kW	147,7	156,7	168,8	182,7	200,7	220,7	260,7	297,7	315,7
❶	E.E.R.		2,81	2,73	2,93	2,86	2,87	2,83	2,9	2,81	2,75
❶	E.E.R.		2,64	2,52	2,83	2,73	2,69	2,69	2,78	2,64	2,54
❷	Absorbed power	kW	50,9	54,92	56,48	61,66	68,01	72,14	88,22	100,72	108,56
❷	Absorbed power	kW	49,47	53,39	54,58	59,6	66,27	70,99	85,32	98,24	105,41
	TCAEI-THAEI MODEL		**2160**	**2180**	**4180**	**4200**	**4220**	**4240**	**4280**	**4330**	**4350**
❸	TCAETI-THAETI sound pressure	dB(A)	59	59	58	58	58	60	61	62	62
❸	TCAEQI-THAEQI sound pressure	dB(A)	52	52	51	51	51	53	54	55	55
❹	TCAETI-THAETI sound power	dB(A)	91	91	90	90	90	92	93	94	94
❹	TCAEQI-THAEQI sound power	dB(A)	84	84	83	83	83	85	86	87	87
	Scroll compressors/steps	n.	2/3	2/3	4/4	4/4	4/4	4/4	4/4	4/4	4/4
	Circuits	n.	1	1	2	2	2	2	2	2	2
	Electrical supply	V-ph-Hz	400-3-50	400-3-50	400-3-50	400-3-50	400-3-50	400-3-50	400-3-50	400-3-50	400-3-50
	DIMENSIONS AND WEIGHTS		**2160**	**2180**	**4180**	**4200**	**4220**	**4240**	**4280**	**4330**	**4350**
	L - Width	mm	3670	3670	2920	2920	2920	2920	3670	3670	3670
❺	L - Width	mm	3670	3670	3670	3670	3670	3670	3670	3670	3670
	H - Height	mm	2480	2480	2480	2480	2480	2480	2480	2480	2480
	P - Depth	mm	1130	1130	2260	2260	2260	2260	2260	2260	2260
❻	TCAETI weight	kg	1240	1240	1580	1580	1580	1640	2050	2150	2150
❻	TCAEQI weight	kg	1405	1405	1790	1790	1790	1850	2270	2370	2370
❻	THAETI weight	kg	1455	1455	1875	1875	1925	2005	2450	2580	2580
❻	THAEQI weight	kg	1630	1630	2170	2170	2220	2300	2765	2895	2895

Data at the following conditions:

❶ Air: 35°C - Water: 12/7°C
❷ Air: 7°C, D.B. - 6°C W.B.- Water: 40/45°C.
❸ In open field (Q = 2) at 10 m from the unit.
❹ Total sound power level in dB(A) based on measurements carried out in accordance with regulation UNI EN-ISO 9614.
❺ Width with ASP-ASDP accessory
❻ Weight referred to the unit without load and not accessorised.
TCAEQI-THAEQI super-silenced versions.
Performance according to EN 14511.

	SEASONAL ENERGY PERFORMANCE		2160	2180	4180	4200	4220	4240	4280	4330	4350
	TCAETI MODEL SEASONAL PERFORMANCE IN COOLING MODE										
①	Pdesignc (EN 14825)	kW	163,6	177,7	184,7	200,7	221,7	244,6	284,7	332,7	356,6
①	SEER (EN 14825)		4,51	4,34	4,63	4,56	4,45	4,4	4,75	4,64	4,56
②	$\eta_{s,c}$	%	177	171	182	179	175	173	187	183	179
	TCAEQI MODEL SEASONAL PERFORMANCE IN COOLING MODE										
①	Pdesignc (EN 14825)	kW	156,7	166,7	176,7	191,7	207,6	228,7	275,7	317,7	336,7
①	SEER (EN 14825)		4,33	4,16	4,41	4,29	4,2	4,17	4,5	4,35	4,24
②	$\eta_{s,c}$	%	170	163	174	169	165	164	177	171	167
	THAETI MODEL SEASONAL ENERGY PERFORMANCE IN HEATING MODE										
③	Pdesignh (EN 14825)	kW	133	143	146	159	175	187	228	262	282
③	SCOP (EN 14825)		3,96	3,96	3,81	3,76	3,79	3,79	3,93	3,9	3,85
④	η_s	%	155	155	149	147	149	149	154	153	151
	THAEQI MODEL SEASONAL ENERGY PERFORMANCE IN HEATING MODE										
③	Pdesignh (EN 14825)	kW	130	139	142	156	172	185	224	258	274
③	SCOP (EN 14825)		4,01	4,02	3,87	3,83	3,86	3,79	3,95	3,92	3,89
④	η_s	%	157	158	152	150	151	149	155	154	153

① Low temperature application (7°C)
② Seasonal energy efficiency: low temperature cooling (EU Regulation 2016/2281)
③ In Average climatic conditions, low temperature application (35°C)
④ Seasonal energy efficiency: low temperature heating in Average climate (EU Regulations No.811/2013 and No.813/2013)

WinPACK HE-A

TCAEY-THAEY 2110÷4340

Cooling capacity:
91,6÷345 kW

Heating capacity:
110,5÷357 kW

THAETY 4270

Water chillers and packaged reversible air-cooled heat pumps with axial fans. Range with scroll hermetic compressors and R410A refrigerant.

KEY FEATURES

- **High energy efficiency chillers and heat pumps**
- **Standard electronic expansion valve**
- **Multi-purpose for systems with 2 pipes + DHW (with optional RC100)**
- **Built-in MASTER/ SLAVE control**

CONSTRUCTION FEATURES

- Compressor: scroll type, rotary, hermetic complete with thermal protection and casing heater.
- 2, 3 or 4 capacity steps with high efficiency at partial loads.

Water side heat exchanger: with stainless steel plates, complete with closed cell polyurethane foam rubber insulation and water flow differential pressure switch.

- Air side heat exchanger: featuring micro-channels or finned coil with copper pipes and aluminium fins depending on models/sizes.
- Fan: external rotor axial type electric fans with internal thermal protection, accident protection grilles.
- Control: microprocessor electronic control with Adaptive Function Plus logic.
- Structure: load-bearing structure made of galvanised and painted steel plate with polyester powder coating.
- The unit is also complete with:
  - fan and compressor circuit breaker switches;
  - display of cooling circuit high and low pressure;
  - electronic expansion valve;
  - Master/Slave control up to 4 units in parallel;
  - clock board;
  - control of Variable Primary Flow (VPF_R).

VERSIONS

- T - High efficiency version with oversized condensing section (TCAETY-THAETY).
- Q - Super-silenced version complete with soundproofing compressor technical compartment, super-reduced speed fans and oversized condensing section (TCAEQY-THAEQY).

MODELS

- TCAETY: high efficiency unit designed for cooling only.
- TCAEQY: super silenced unit designed for cooling only.
- THAETY: heat pump unit.
- THAEQY: super silenced heat pump unit.

FACTORY FITTED ACCESSORIES

- Shell and tube evaporator.
- PUMP with single or double electric pump, one of which automatic in standby. The electric pumps are available in the low or high head versions.
- TANK&PUMP with integrated buffer tank from 300 to 700 litres (depending on models) and single or double electric pump, complete with expansion tank, air vent valves, safety valve, and water side pressure gauge.
- Inverter pump control for unit start-up.
- Desuperheater.
- 100% heat recovery unit.
- Condensing control.
- Condensing control with fans with EC motor (standard in Q versions).
- Condensing control with over-pressure fans.
- Power factor correction capacitors (cosϕ > 0.94).
- Forced limit of power consumption.
- Forced noise limit.
- Energy parameter measuring device.
- Optimised energy efficiency.
- Soft starter.
- Soundproofed compressor box or technical compartment soundproofing.
- Compressor soundproof enclosures.
- Cooling circuit outlet and inlet valves.
- Refrigerant leak detector.
- Cooling circuit high and low pressure gauges.
- Double safety valves.
- Metal filters or coil protection nets.
- Microchannel coils with E-coating treatment, copper/ copper or pre-painted copper/aluminium depending on the versions.
- Control of min/max power supply voltage.
- Digital input for double set-point.

Features

TCAEQY 2150 with Tank&Pump

- 4-20 mA analogue signal for shifting set-point.
- Evaporator antifreeze heater, electrical panel, buffer tank, electric pumps and heat exchangers for heat recovery, if applicable.
- Buffer tank integrative heaters.
- Low temperature water production.
- Interfaces for serial communication with other devices.
- Anti-vibration mounts.

SEPARATELY SUPPLIED ACCESSORIES

- Remote keypad with display.
- Thermostat with display.
- Rhoss supervisors for unit monitoring and remote management.
- Rhoss sequencer for integrated management of multiple chillers.

WinPACK HE-A

TCAEY-THAEY 2110÷4340

	TCAETY-TCAEQY MODEL		2110	2120	2140	2150	2170	2200	2220	4240	4270	4310	4340
❶	Nominal cooling capacity	kW	110,5	121,5	138,4	156,4	175,4	200,3	223,2	241,3	276,3	309,1	345,1
❶	Nominal cooling capacity	kW	100,6	108,6	126,5	140,5	155,5	181,4	199,4	218,4	251,4	280,2	318,2
❶	E.E.R.		3,13	3,1	3,13	3,11	3,1	3,11	3,1	3,1	3,1	3,1	3,1
❶	E.E.R.		2,73	2,6	2,69	2,65	2,6	2,64	2,61	2,56	2,68	2,62	2,63
❶	Absorbed power	kW	35,3	39,2	44,2	50,3	56,6	64,4	72	77,8	88,8	99,7	111,3
❶	Absorbed power	kW	36,8	41,8	47	53	59,8	68,7	76,4	85	93,8	106,9	121
	THAETY-THAEQY MODEL		**2110**	**2120**	**2140**	**2150**	**2170**	**2200**	**2220**	**4240**	**4270**	**4310**	**4340**
❷	Nominal heating capacity	kW	114,5	124,5	141,6	161,6	181,7	204,8	233,9	249,8	282,8	321	357
❷	Nominal heating capacity	kW	110,5	118,5	136,5	153,6	171,6	194,7	221,8	236,7	266,7	301	341,9
❷	C.O.P.		3,22	3,22	3,21	3,22	3,23	3,22	3,21	3,2	3,2	3,2	3,2
❷	C.O.P.		3,28	3,29	3,27	3,26	3,26	3,23	3,26	3,12	3,11	2,95	3,08
❶	Nominal cooling capacity	kW	101,6	112,6	126,5	145,4	161,4	186,3	209,3	231,3	263,3	301,1	334,1
❶	Nominal cooling capacity	kW	91,6	100,6	118,6	130,6	144,5	169,5	187,4	206,5	238,4	270,3	302,3
❷	Absorbed power	kW	35,6	38,7	44,1	50,2	56,3	63,6	72,9	78,1	88,4	100,3	111,6
❷	Absorbed power	kW	33,7	36	41,7	47,1	52,6	60,3	68	75,9	85,8	102	111
	TCAETY-TCAEQY-THAETY-THAEQY MODEL		**2110**	**2120**	**2140**	**2150**	**2170**	**2200**	**2220**	**4240**	**4270**	**4310**	**4340**
❸	TCAETY sound pressure	dB(A)	55	56	57	57	58	59	59	58	60	60	62
❸	THAETY sound pressure	dB(A)	53	54	55	55	56	57	57	58	60	60	62
❸	TCAEQY-THAEQY sound pressure	dB(A)	47	47	48	48	49	50	50	51	53	53	54
❹	TCAETY sound power	dB(A)	87	88	89	89	90	91	91	90	92	92	94
❹	THAETY sound power	dB(A)	85	86	87	87	88	89	89	90	92	92	94
❹	TCAEQY-THAEQY sound power	dB(A)	79	79	80	80	81	82	82	83	85	85	86
	Scroll compressors/steps	n.	2/3	2/3	2/2	2/3	2/2	2/3	2/2	4/4	4/4	4/4	4/4
	Circuits	n.	1	1	1	1	1	1	1	2	2	2	2
	Electrical supply	V-ph-Hz	400-3-50	400-3-50	400-3-50	400-3-50	400-3-50	400-3-50	400-3-50	400-3-50	400-3-50	400-3-50	400-3-50
	DIMENSIONS AND WEIGHTS		**2110**	**2120**	**2140**	**2150**	**2170**	**2200**	**2220**	**4240**	**4270**	**4310**	**4340**
	L - Width	mm	3600	3600	3600	3600	4550	4550	4550	4800	4800	5300	5300
	H - Height	mm	2440	2440	2440	2440	2440	2440	2440	2030	2030	2030	2030
	P - Depth	mm	1350	1350	1350	1350	1350	1350	1350	2090	2090	2090	2090
❺	TCAETY weight	kg	1090	1100	1110	1130	1280	1300	1320	2290	2390	2520	2640
❺	TCAEQY weight	kg	1250	1260	1270	1290	1440	1460	1480	2420	2520	2650	2770
❺	THAETY weight	kg	1380	1410	1420	1500	1670	1690	1780	2470	2570	2720	2840
❺	THAEQY weight	kg	1420	1450	1460	1540	1710	1730	1820	2600	2700	2850	2970

Data at the following conditions:
❶ Air: 35°C - Water: 12/7°C.
❷ Air: 7°C, D.B. 6°C W.B.- Water: 40/45°C.
❸ In open field (Q = 2) at 10 m from the unit.
❹ Total sound power level in dB(A) based on measurements carried out in accordance with regulation UNI EN-ISO 9614.
❺ Weight referred to the unit without load and not accessorised.
TCAEQY-THAEQY super-silenced versions.
Performance according to EN 14511.

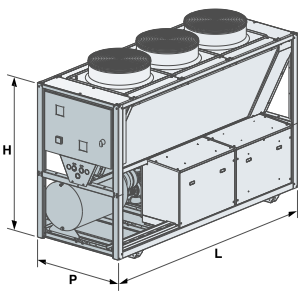

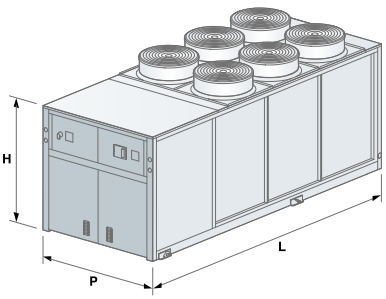

	SEASONAL ENERGY PERFORMANCE		2110	2120	2140	2150	2170	2200	2220	4240	4270	4310	4340
	TCAETY MODEL SEASONAL PERFORMANCE IN COOLING MODE												
①	Pdesignc (EN 14825)	kW	110,5	121,5	138,4	156,4	175,4	200,3	223,2	241,3	276,2	309,1	345
①	SEER (EN 14825)		4,36	4,39	4,21	4,35	4,38	4,34	4,34	4,4	4,4	4,4	4,38
②	$\eta_{s,c}$	%	171	173	165	171	172	170	171	173	173	173	172
	TCAEQY MODEL SEASONAL PERFORMANCE IN COOLING MODE												
①	Pdesignc (EN 14825)	kW	100,6	108,6	126,5	140,5	155,5	181,4	199,4	218,4	251,4	280,2	318,2
①	SEER (EN 14825)		4,3	4,13	4,15	4,23	4,12	4,24	4,13	4,21	4,3	4,31	4,26
②	$\eta_{s,c}$	%	169	162	163	166	162	167	162	166	169	170	167
	THAETY MODEL SEASONAL PERFORMANCE IN HEATING MODE												
③	Pdesignh (EN 14825)	kW	96	104	118	135	150	173	201	211	242	273	302
③	SCOP (EN 14825)		3,53	3,51	3,75	3,49	3,76	3,39	3,57	3,64	3,62	3,64	3,63
④	η_s	%	138	138	147	137	148	133	140	142	142	143	142
	THAEQY MODEL SEASONAL PERFORMANCE IN HEATING MODE												
③	Pdesignh (EN 14825)	kW	91	98	113	127	141	165	190	199	227	254	288
③	SCOP (EN 14825)		3,62	3,61	3,84	3,59	3,88	3,53	3,65	3,56	3,54	3,37	3,52
④	η_s	%	142	141	151	141	152	138	143	139	139	132	138

① Low temperature application (7°C)
② Seasonal energy efficiency: low temperature cooling (EU Regulation 2016/2281)
③ In Average climatic conditions, low temperature application (35°C)
④ Seasonal energy efficiency: low temperature heating in Average climate (EU Regulations No.811/2013 and No.813/2013)

WinPACK SE

TCAEY-THAEY 2110÷4340

Cooling capacity:
97,6÷328,6 kW

Heating capacity:
109,5÷354,6 kW

TCAESY 2200 with Tank&Pump

Water chillers and packaged reversible air-cooled heat pumps with axial fans. Range with scroll hermetic compressors and R410A refrigerant.

KEY FEATURES

- **High performance range with extended working limits**
- **Wide range of accessories**
- **Compact version B for replacement markets**
- **Multi-purpose for systems with 2 pipes + DHW (with optional RC100)**
- **Built-in MASTER/ SLAVE control**

CONSTRUCTION FEATURES

- Compressor: scroll type, rotary, hermetic complete with thermal protection and casing heater.
- 2, 3 or 4 capacity steps with high efficiency at partial loads.

Water side heat exchanger: with stainless steel plates, complete with closed cell polyurethane foam rubber insulation and water flow differential pressure switch.

- Air side heat exchanger: featuring micro-channels or finned coil with copper pipes and aluminium fins depending on models/sizes.
- Fan: external rotor axial type electric fans with internal thermal protection, accident protection grilles. The electric fans, based on the models, are fitted with a proportional electronic device for continuous regulation of the rotation speed of the fans.
- Control: microprocessor electronic control with Adaptive Function Plus logic.
- Structure: load-bearing structure made of galvanised and painted steel plate with polyester powder coating.
- The unit is also complete with:
  - fan and compressor circuit breaker switches;
  - display of cooling circuit high and low pressure;
  - Master/Slave control up to 4 units in parallel;
  - clock board;
  - control of Variable Primary Flow (VPF_R).

VERSIONS

- B -Standard version (TCAEBY-THAEBY).
- S - Silenced version complete with compressor technical compartment soundproofing, reduced speed fans (TCAESY-THAESY).

MODELS

- TCAEBY: standard unit designed for cooling only.
- TCAESY: silenced unit designed for cooling only.
- THAEBY: heat pump unit.
- THAESY: silenced heat pump unit

FACTORY FITTED ACCESSORIES

- Shell and tube evaporator.
- PUMP with single or double electric pump, one of which automatic in standby. The electric pumps are available in the low or high head versions.
- TANK&PUMP with integrated buffer tank from 300 to 700 litres (depending on models) and single or double electric pump, complete with expansion tank, air vent valves, safety valve, and water side pressure gauge.
- Inverter pump control for unit start-up.
- Desuperheater.
- 100% heat recovery unit.
- Electronic expansion valve.
- Condensing control (standard in models TCAEBY, TCAESY, THAESY).
- Condensing control with fans with EC motor.
- Condensing control with over-pressure fans.
- Power factor correction capacitors (cosϕ > 0.94).
- Forced limit of power consumption.
- Forced noise limit.
- Energy parameter measuring device.
- Optimised energy efficiency.
- Soft starter.
- Soundproofed compressor box or technical compartment soundproofing.
- Compressor soundproof enclosures.
- Cooling circuit outlet and inlet valves.
- Refrigerant leak detector.
- Cooling circuit high and low pressure gauges.
- Double safety valves.
- Metal filters or coil protection nets.
- Microchannel coils with E-coating treatment, copper/copper and pre-painted copper/aluminium depending on the versions.

Features

THAEBY 4310 with coil protection nets accessory

- Control of min/max power supply voltage.
- Digital input for double set-point.
- 4-20 mA analogue signal for shifting set-point.
- Evaporator antifreeze heater, electrical panel, buffer tank, electric pumps and heat exchangers for heat recovery, if applicable.
- Buffer tank integrative heaters.
- Low temperature water production.
- Interfaces for serial communication with other devices.
- Anti-vibration mounts.

SEPARATELY SUPPLIED ACCESSORIES

- Remote keypad with display.
- Thermostat with display.
- Rhoss supervisors for unit monitoring and remote management.
- Rhoss sequencer for integrated management of multiple chillers.

WinPACK SE

TCAEY-THAEY 2110÷4340

	TCAEBY-TCAESY MODEL		2110	2120	2140	2150	2170	2200	2220
❶	Nominal cooling capacity	kW	106,5	114,4	127,4	147,3	165,2	188,1	212,1
❶	Nominal cooling capacity	kW	102,5	110,4	122,4	142,3	159,2	183,2	205,1
❶	E.E.R.		2,81	2,79	2,8	2,81	2,81	2,8	2,8
❶	E.E.R.		2,72	2,67	2,65	2,71	2,7	2,66	2,7
❶	Absorbed power	kW	37,9	41	45,5	52,4	58,8	67,2	75,8
❶	Absorbed power	kW	37,7	41,3	46,2	52,5	59	68,9	76
	THAEBY-THAESY MODEL		**2110**	**2120**	**2140**	**2150**	**2170**	**2200**	**2220**
❷	Nominal heating capacity	kW	112,6	123,7	139,7	158,8	176,9	198	229,1
❷	Nominal heating capacity	kW	109,5	121,7	135,7	155,8	173,9	195,9	226
❷	C.O.P.		3,05	3,08	3,08	3,04	3,06	3,07	3,07
❷	C.O.P.		3,1	3,13	3,1	3,13	3,1	3,09	3,13
❶	Nominal cooling capacity	kW	99,5	110,4	123,4	142,3	159,3	182,2	206,1
❶	Nominal cooling capacity	kW	97,6	106,5	117,5	136,4	152,3	175,3	199,2
❷	Absorbed power	kW	36,9	40,2	45,4	52,2	57,8	64,5	74,6
❷	Absorbed power	kW	35,3	38,9	43,8	49,8	56,1	63,4	72,2
	TCAEBY-TCAESY-THAEBY-THAESY MODEL		**2110**	**2120**	**2140**	**2150**	**2170**	**2200**	**2220**
❸	TCAEBY sound pressure	dB(A)	55	56	56	57	58	58	59
❸	THAEBY sound pressure	dB(A)	53	54	54	55	56	56	57
❸	TCAESY sound pressure	dB(A)	49	50	50	51	52	52	53
❸	THAESY sound pressure	dB(A)	49	50	50	51	52	52	53
❹	TCAEBY sound power	dB(A)	87	88	88	89	90	90	91
❹	THAEBY sound power	dB(A)	85	86	86	87	88	88	89
❹	TCAESY sound power	dB(A)	81	82	82	83	84	84	85
❹	THAESY sound power	dB(A)	81	82	82	83	84	84	85
	Scroll compressors/steps	n.	2/3	2/3	2/2	2/3	2/2	2/3	2/2
	Circuits	n.	1	1	1	1	1	1	1
	Electrical supply	V-ph-Hz	400-3-50	400-3-50	400-3-50	400-3-50	400-3-50	400-3-50	400-3-50
	DIMENSIONS AND WEIGHT		**2110**	**2120**	**2140**	**2150**	**2170**	**2200**	**2220**
	W - TCAEBY-TCAESY width	mm	2650	2650	2650	3600	3600	3600	4550
	W - THAEBY-THAESY width	mm	2650	2650	2650	3600	3600	3600	4550
	H - TCAEBY-TCAESY height	mm	2440	2440	2440	2440	2440	2440	2440
	H - THAEBY-THAESY height	mm	2440	2440	2440	2440	2440	2440	2440
	D - TCAEBY-TCAESY depth	mm	1350	1350	1350	1350	1350	1350	1350
	D - THAEBY-THAESY depth	mm	1350	1350	1350	1350	1350	1350	1350
❺	TCAEBY weight	kg	990	1000	1010	1160	1180	1180	1340
❺	TCAESY weight	kg	1110	1120	1130	1280	1300	1300	1460
❺	THAEBY weight	kg	1250	1310	1320	1470	1480	1565	1730
❺	THAESY weight	kg	1250	1310	1320	1470	1480	1565	1730

Data at the following conditions:
❶ Air: 35°C - Water: 12/7°C.
❷ Air: 7°C, D.B. 6°C W.B.- Water: 40/45°C.
❸ In open field (Q = 2) at 10 m from the unit.
❹ Total sound power level in dB(A) based on measurements carried out in accordance with regulation UNI EN-ISO 9614.
❺ Weight referred to the unit without load and not accessorised.
TCAESY-THAESY silenced versions.
Performance according to EN 14511.

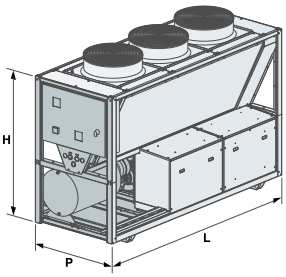

	SEASONAL ENERGY PERFORMANCE		2110	2120	2140	2150	2170	2200	2220
	TCAEBY MODEL SEASONAL PERFORMANCE IN COOLING MODE								
①	Pdesignc (EN 14825)	kW	106,5	114,4	127,4	147,3	165,2	188,1	212,1
①	SEER (EN 14825)		4,16	4,15	4,13	4,17	4,14	4,27	4,13
②	$\eta_{s,c}$	%	164	163	162	164	163	168	162
	TCAESY MODEL SEASONAL PERFORMANCE IN COOLING MODE								
①	Pdesignc (EN 14825)	kW	102,5	110,4	122,4	142,3	159,2	183,2	205,1
①	SEER (EN 14825)		4,19	4,18	4,11	4,23	4,15	4,22	4,16
②	$\eta_{s,c}$	%	164	164	161	166	163	166	163
	THAEBY MODEL SEASONAL PERFORMANCE IN HEATING MODE								
③	Pdesignh (EN 14825)	kW	95	104	119	134	149	170	200
③	SCOP (EN 14825)		3,38	3,4	3,67	3,36	3,64	3,35	3,53
④	η_s	%	132	133	144	131	142	131	138
	THAESY MODEL SEASONAL PERFORMANCE IN HEATING MODE								
③	Pdesignh (EN 14825)	kW	92	102	115	131	146	167	197
③	SCOP (EN 14825)		3,47	3,49	3,71	3,5	3,73	3,39	3,62
④	η_s	%	136	136	145	137	146	133	142

① Low temperature application (7°C)
② Seasonal energy efficiency: low temperature cooling (EU Regulation 2016/2281)
③ In Average climatic conditions, low temperature application (35°C)
④ Seasonal energy efficiency: low temperature heating in Average climate (EU Regulations No.811/2013 and No.813/2013)

WinPACK SE

TCAEY-THAEY 2110÷4340

	TCAEBY-TCAESY MODEL		4150	4170	4200	4220	4240	4270	4310	4340
❶	Nominal cooling capacity	kW	146,3	166,4	189,2	213,2	229,2	256	299,9	328,7
❶	Nominal cooling capacity	kW	142,3	161,4	182,3	207,2	224,2	250	291	319,7
❶	E.E.R.		2,99	2,9	2,83	2,92	2,8	2,8	2,81	2,76
❶	E.E.R.		2,93	2,82	2,67	2,82	2,68	2,66	2,68	2,61
❶	Absorbed power	kW	48,9	57,4	66,9	73	81,9	91,4	106,7	119,1
❶	Absorbed power	kW	48,6	57,2	68,3	73,5	83,7	94	108,6	122,5
	THAEBY-THAESY MODEL		**4150**	**4170**	**4200**	**4220**	**4240**	**4270**	**4310**	**4340**
❷	Nominal heating capacity	kW	152,7	172,6	197,8	225,9	249	281,3	319,3	354,6
❷	Nominal heating capacity	kW	147,7	167,6	192,8	219,9	245	278,3	315,2	345,5
❷	C.O.P.		3,09	3,14	3,04	3,04	3,03	3,01	3,01	2,98
❷	C.O.P.		3,1	3,12	3,09	3,09	3,09	3,05	3,07	3,03
❶	Nominal cooling capacity	kW	141,3	163,4	186,2	209,1	227,1	253,9	295,9	324,7
❶	Nominal cooling capacity	kW	136,4	156,4	180,3	200,2	220,2	248	286,1	313,8
❷	Absorbed power	kW	49,4	55	65,1	74,3	82,2	93,5	106,1	119
❷	Absorbed power	kW	47,6	53,7	62,4	71,2	79,3	91,2	102,7	114
	TCAEBY-TCAESY-THAEBY-THAESY MODEL		**4150**	**4170**	**4200**	**4220**	**4240**	**4270**	**4310**	**4340**
❸	TCAEBY sound pressure	dB(A)	57	57	57	58	60	60	60	61
❸	THAEBY sound pressure	dB(A)	54	54	56	56	58	60	60	61
❸	TCAESY sound pressure	dB(A)	51	51	51	52	54	54	56	57
❸	THAESY sound pressure	dB(A)	50	50	52	52	54	55	56	57
❹	TCAEBY sound power	dB(A)	89	89	89	90	92	92	92	93
❹	THAEBY sound power	dB(A)	86	86	88	88	90	92	92	93
❹	TCAESY sound power	dB(A)	83	83	83	84	86	86	88	89
❹	THAESY sound power	dB(A)	82	82	84	84	86	87	88	89
	Scroll compressors/steps	n.	4/4	4/4	4/4	4/4	4/4	4/4	4/4	4/4
	Circuits	n.	2	2	2	2	2	2	2	2
	Electrical supply	V-ph-Hz	400-3-50	400-3-50	400-3-50	400-3-50	400-3-50	400-3-50	400-3-50	400-3-50
	DIMENSIONS AND WEIGHT		**4150**	**4170**	**4200**	**4220**	**4240**	**4270**	**4310**	**4340**
	W - TCAEBY-TCAESY width	mm	3600	3600	3600	4550	4550	4550	4800	4800
	W - THAEBY-THAESY width	mm	3450	3450	3700	3700	4800	4800	4800	4800
	H - TCAEBY-TCAESY height	mm	2440	2440	2440	2440	2440	2440	2030	2030
	H - THAEBY-THAESY height	mm	2000	2000	2030	2030	2030	2030	2030	2030
	D - TCAEBY-TCAESY depth	mm	1350	1350	1350	1350	1350	1350	2090	2090
	D - THAEBY-THAESY depth	mm	1520	1520	2090	2090	2090	2090	2090	2090
❺	TCAEBY weight	kg	1165	1185	1190	1335	1670	1690	2400	2410
❺	TCAESY weight	kg	1300	1320	1325	1470	1830	1850	2440	2450
❺	THAEBY weight	kg	1450	1525	1725	1800	2375	2460	2580	2595
❺	THAESY weight	kg	1475	1550	1765	1840	2415	2500	2620	2635

Data at the following conditions:
❶ Air: 35°C - Water: 12/7°C.
❷ Air: 7°C, D.B. 6°C W.B.- Water: 40/45°C.
❸ In open field (Q = 2) at 10 m from the unit.
❹ Total sound power level in dB(A) based on measurements carried out in accordance with regulation UNI EN-ISO 9614.
❺ Weight referred to the unit without load and not accessorised.
TCAESY-THAESY silenced versions.
Performance according to EN 14511.

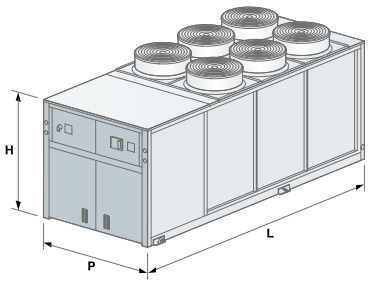

	SEASONAL ENERGY PERFORMANCE		4150	4170	4200	4220	4240	4270	4310	4340
	TCAEBY MODEL SEASONAL PERFORMANCE IN COOLING MODE									
①	Pdesignc (EN 14825)	kW	146,3	166,4	189,2	213,2	229,2	256	299,9	328,6
①	SEER (EN 14825)		4,3	4,26	4,3	4,33	4,26	4,32	4,26	4,25
②	$\eta_{s,c}$	%	169	167	169	170	168	170	167	167
	TCAESY MODEL SEASONAL PERFORMANCE IN COOLING MODE									
①	Pdesignc (EN 14825)	kW	142,3	161,4	182,3	207,2	224,2	250	291	319,7
①	SEER (EN 14825)		4,35	4,28	4,19	4,33	4,24	4,25	4,26	4,21
②	$\eta_{s,c}$	%	171	168	165	170	167	167	167	165
	THAEBY MODEL SEASONAL PERFORMANCE IN HEATING MODE									
③	Pdesignh (EN 14825)	kW	129	145	168	192	211	240	271	301
③	SCOP (EN 14825)		3,41	3,47	3,33	3,33	3,35	3,33	3,34	3,32
④	η_s	%	133	136	130	130	131	130	131	130
	THAESY MODEL SEASONAL PERFORMANCE IN HEATING MODE									
③	Pdesignh (EN 14825)	kW	125	140	164	187	207	238	267	292
③	SCOP (EN 14825)		3,41	3,45	3,4	3,4	3,44	3,39	3,41	3,37
④	η_s	%	134	135	133	133	135	132	133	132

① Low temperature application (7°C)
② Seasonal energy efficiency: low temperature cooling (EU Regulation 2016/2281)
③ In Average climatic conditions, low temperature application (35°C)
④ Seasonal energy efficiency: low temperature heating in Average climate (EU Regulations No.811/2013 and No.813/2013)

WinPACK-R HE-A

TCAETY-TCAEQY 4235÷4370

Cooling capacity:
221,4÷372 kW

TCAETY 4290 with Tank&Pump and BCI, RPB, RPE, FI10 accessories

KEY FEATURES

- **High energy efficiency compact chillers**
- **Standard electronic expansion valve**
- **Integrated MASTER/SLAVE control**

Packaged air-cooled water chillers with axial fans. Range with scroll hermetic compressors and R410A refrigerant.

CONSTRUCTION FEATURES

- Compressor: scroll type, rotary, hermetic complete with thermal protection and casing heater.
- 4 capacity steps with high efficiency at partial loads.

Water side heat exchanger: with stainless steel plates, complete with closed cell polyurethane foam rubber insulation and water flow differential pressure switch.

- Air side heat exchanger: with micro-channels.
- Fan: external rotor axial type electric fans with internal thermal protection, accident protection grilles.
- Control: microprocessor electronic control with Adaptive Function Plus logic.
- Structure: load-bearing structure made of galvanised and painted steel plate with polyester powder coating.
- The unit is also complete with:
  - fan and compressor circuit breaker switches;
  - display of cooling circuit high and low pressure;
  - electronic expansion valve;
  - Master/Slave control up to 4 units in parallel;
  - clock board;
  - control of Variable Primary Flow (VPF_R).

MODELS

- TCAETY: high efficiency unit designed for cooling only.
- TCAEQY: super silenced unit designed for cooling only.

VERSIONS

- T - High efficiency version with oversized condensing section.
- Q - Super-silenced version complete with compressor technical compartment soundproofing, super-reduced speed fans and oversized condensing section.

FACTORY FITTED ACCESSORIES

- Shell and tube evaporator.
- PUMP with single or double electric pump, one of which automatic in standby. The electric pumps are available in the low or high head versions.
- TANK&PUMP with 700 - 1000 litre integrated buffer tank (depending on models) and single or double electric pump, complete with expansion tank, air vent valves, safety valve and water side pressure gauge.
- Inverter pump control for unit start-up.
- Desuperheater.
- 100% heat recovery unit.
- Condensing control.
- Condensing control with fans with EC motor (standard in Q versions).
- Condensing control with over-pressure fans.
- Power factor correction capacitors (cosϕ > 0.94).
- Forced limit of power consumption.
- Forced noise limit.
- Energy parameter measuring device.
- Optimised energy efficiency.
- Soft starter.
- Soundproofed compressor box.
- Compressor soundproof enclosures.
- Cooling circuit outlet and inlet valves.
- Refrigerant leak detector.
- Cooling circuit high and low pressure gauges.
- Double safety valves.
- Coil protection nets.
- Micro-channel coils with E-coating treatment.
- Control of min/max power supply voltage.
- Digital input for double set-point.
- 4-20 mA analogue signal for shifting set-point.
- Evaporator antifreeze heater, electrical panel, buffer tank, electric pumps and heat exchangers for heat recovery, if applicable.
- Low temperature water production.
- Interfaces for serial communication with other devices.
- Anti-vibration mounts.

SEPARATELY SUPPLIED ACCESSORIES

- Remote keypad with display.
- Thermostat with display.
- Rhoss supervisors for unit monitoring and remote management.
- Rhoss sequencer for integrated management of multiple chillers.

Features

COOL · SCROLL COMPRESSOR · GAS R410A · OUTDOOR · ADAPTIVE FUNCTION PLUS · EUROVENT CERTIFIED PERFORMANCE www.eurovent-certification.com

	TCAETY-TCAEQY MODEL		4235	4260	4290	4330	4370
❶	Nominal cooling capacity	kW	235,3	261,3	292,2	334	372
❶	Nominal cooling capacity	kW	221,4	243,4	269,4	312,1	343,1
❶	E.E.R.		3,27	3,2	3,12	3,19	3,15
❶	E.E.R.		3,12	2,88	2,68	2,89	2,75
❶	Absorbed power	kW	72	81,7	93,7	104,7	118,1
❶	Absorbed power	kW	71	84,5	100,5	108	124,8
	TCAETY-TCAEQY MODEL		**4235**	**4260**	**4290**	**4330**	**4370**
❷	TCAETY sound pressure	dB(A)	59	60	61	62	63
❷	TCAEQY sound pressure	dB(A)	50	51	52	53	54
❸	TCAETY sound power	dB(A)	91	92	93	94	95
❸	TCAEQY sound power	dB(A)	82	83	84	85	86
	Scroll compressors/steps	n.	4/4	4/4	4/4	4/4	4/4
	Circuits	n.	2	2	2	2	2
	Electrical supply	V-ph-Hz	400-3-50	400-3-50	400-3-50	400-3-50	400-3-50
	DIMENSIONS AND WEIGHTS		**4235**	**4260**	**4290**	**4330**	**4371**
	L - Width	mm	3650	3650	3650	4750	4750
	H - Height	mm	2450	2450	2450	2450	2450
	P - Depth	mm	2260	2260	2260	2260	2260
❹	TCAETY weight	kg	1620	1820	1985	2265	2310
❹	TCAEQY weight	kg	1895	2095	2260	2540	2585

Data at the following conditions:
❶ Air: 35°C - Water: 12/7°C.
❷ In open field (Q = 2) at 10 m from the unit.
❸ Total sound power level in dB(A) based on measurements carried out in accordance with regulation UNI EN-ISO 9614.
❹ Weight referred to the unit without load and not accessorised.
TCAEQY super-silenced versions.
Performance according to EN 14511.

	SEASONAL ENERGY PERFORMANCE		4235	4260	4290	4330	4370
	TCAETY MODEL SEASONAL PERFORMANCE IN COOLING MODE						
①	Pdesignc (EN 14825)	kW	235,3	261,3	292,2	334	372
①	SEER (EN 14825)		4,45	4,46	4,44	4,6	4,54
②	$\eta_{s,c}$	%	175	175	175	181	179
	TCAEQY MODEL SEASONAL PERFORMANCE IN COOLING MODE						
①	Pdesignc (EN 14825)	kW	221,4	243,4	269,4	312,1	343,1
①	SEER (EN 14825)		4,39	4,34	4,32	4,43	4,42
②	$\eta_{s,c}$	%	173	171	170	174	174

① Low temperature application (7°C)
② Seasonal energy efficiency: low temperature cooling (EU Regulation 2016/2281)

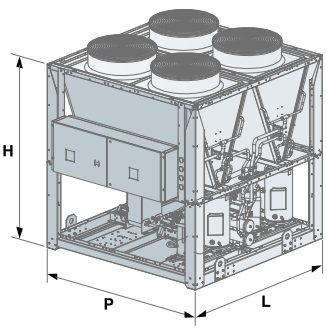

WinPACK-R SE

TCAEBY-TCAESY 4225÷4345

Cooling capacity:
214,2÷345,7 kW

TCAESY 4245 with Tank&Pump and PTL, RPE accessories

KEY FEATURES

- **Compact chillers also for replacement markets**
- **High performance range with extended operating limits**
- **Simplified installation thanks to pumping unit accessories**
- **Integrated MASTER/SLAVE control**

Packaged air-cooled water chillers with axial fans. Range with scroll hermetic compressors and R410A refrigerant.

CONSTRUCTION FEATURES

- Compressor: scroll type, rotary, hermetic complete with thermal protection and casing heater.
- 4 capacity steps with high efficiency at partial loads.

Water side heat exchanger: with stainless steel plates, complete with closed cell polyurethane foam rubber insulation and water flow differential pressure switch.

- Air side heat exchanger: with micro-channels.
- Fan: external rotor axial type electric fans with internal thermal protection, accident protection grilles.
- Control: microprocessor electronic control with Adaptive Function Plus logic.
- Structure: load-bearing structure made of galvanised and painted steel plate with polyester powder coating.
- The unit is also complete with:
  - fan and compressor circuit breaker switches;
  - display of cooling circuit high and low pressure;
  - Master/Slave control up to 4 units in parallel;
  - clock board;
  - control of Variable Primary Flow (VPF_R).

VERSIONS

- B - Standard version.
- S - Silenced version complete with compressor technical compartment soundproofing and reduced speed fans.

MODELS

- TCAEBY: standard unit designed for cooling only.
- TCAESY: silenced unit designed for cooling only.

FACTORY FITTED ACCESSORIES

- Shell and tube evaporator.
- PUMP with single or double electric pump, one of which automatic in standby. The electric pumps are available in the low or high head versions.
- TANK&PUMP with 500 - 700 litre integrated buffer tank (depending on models) and single or double electric pump, complete with expansion tank, air vent valves, safety valve and water side pressure gauge.
- Inverter pump control for unit start-up.
- Desuperheater.
- 100% heat recovery unit.
- Electronic expansion valve.
- Condensing control (standard in S versions).
- Condensing control with fans with EC motor.
- Condensing control with over-pressure fans.
- Power factor correction capacitors (cosϕ > 0.94).
- Forced limit of power consumption.
- Forced noise limit.
- Energy parameter measuring device.
- Optimised energy efficiency.
- Soft starter.
- Soundproofed compressor box.
- Compressor soundproof enclosures.
- Cooling circuit outlet and inlet valves.
- Refrigerant leak detector.
- Cooling circuit high and low pressure gauges.
- Double safety valves.
- Coil protection nets.
- Micro-channel coils with E-coating treatment.
- Control of min/max power supply voltage.
- Digital input for double set-point.
- 4-20 mA analogue signal for shifting set-point.
- Evaporator antifreeze heater, electrical panel, buffer tank, electric pumps and heat exchangers for heat recovery, if applicable.
- Low temperature water production.
- Interfaces for serial communication with other devices.
- Anti-vibration mounts.

SEPARATELY SUPPLIED ACCESSORIES

- Remote keypad with display.
- Thermostat with display.
- Rhoss supervisors for unit monitoring and remote management.
- Rhoss sequencer for integrated management of multiple chillers.

Features

	TCAEBY-TCAESY MODEL		4225	4245	4265	4315	4345
❶	Nominal cooling capacity	kW	220,2	241,2	264	313,9	345,7
❶	Nominal cooling capacity	kW	214,2	234,2	252,1	305	333,8
❶	E.E.R.		3	2,81	2,61	2,88	2,81
❶	E.E.R.		2,9	2,67	2,4	2,76	2,66
❶	Absorbed power	kW	73,4	85,8	101,1	108,9	123
❶	Absorbed power	kW	73,9	87,7	105	110,5	125,5
	TCAEBY-TCAESY MODEL		**4225**	**4245**	**4265**	**4315**	**4345**
❷	Sound pressure	dB(A)	58	59	60	61	62
❷	Sound pressure	dB(A)	52	53	54	56	57
❸	Sound power	dB(A)	90	91	92	93	94
❸	Sound power	dB(A)	84	85	86	88	89
	Scroll compressors/steps	n.	4/4	4/4	4/4	4/4	4/4
	Circuits	n.	2	2	2	2	2
	Electrical supply	V-ph-Hz	400-3-50	400-3-50	400-3-50	400-3-50	400-3-50
	DIMENSIONS AND WEIGHTS		**4225**	**4245**	**4265**	**4315**	**4345**
	L - Width	mm	2550	2550	2550	3650	3650
	H - Height	mm	2450	2450	2450	2450	2450
	P - Depth	mm	2260	2260	2260	2260	2260
❹	TCAEBY weight	kg	1300	1500	1650	1985	2000
❹	TCAESY weight	kg	1460	1660	1810	2215	2230

Data at the following conditions:
❶ Air: 35°C - Water: 12/7°C.
❷ In open field (Q = 2) at 10 m from the unit.
❸ Total sound power level in dB(A) based on measurements carried out in accordance with regulation UNI EN-ISO 9614.
❹ Weight referred to the unit without load and not accessorised.
TCAESY silenced versions
Performance according to EN 14511.

	SEASONAL ENERGY PERFORMANCE		4225	4245	4265	4315	4345
	TCAEBY MODEL SEASONAL PERFORMANCE IN COOLING MODE						
①	Pdesignc (EN 14825)	kW	220,2	241,2	264	313,9	345,7
①	SEER (EN 14825)		4,31	4,31	4,3	4,34	4,34
②	$\eta_{s,c}$	%	169	169	169	170	171
	TCAESY MODEL SEASONAL PERFORMANCE IN COOLING MODE						
①	Pdesignc (EN 14825)	kW	214,2	234,2	252,1	305	333,8
①	SEER (EN 14825)		4,28	4,27	4,26	4,3	4,3
②	$\eta_{s,c}$	%	168	168	167	169	169

① Low temperature application (7°C)
② Seasonal energy efficiency: low temperature cooling (EU Regulation 2016/2281)

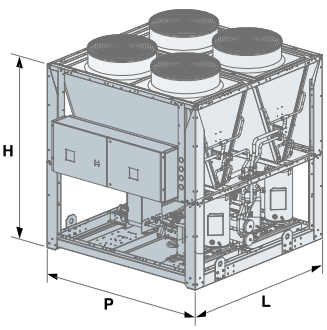

Y-Pack FREECOOLING

TFAEY-TGAEY 4160÷4320

Cooling capacity:
170÷361 kW

TFAETY 4230 with coil protection nets accessory

KEY FEATURES

- **NO GLYCOL version available**
- **Plug&Play Range**

Packaged air-cooled water chillers in Freecooling mode (TFAEY) and Freecooling NO-GLYCOL mode (TGAEY) with axial fans. Range with scroll hermetic compressors and R410A refrigerant.

CONSTRUCTION FEATURES

- Compressor: scroll type, rotary, hermetic complete with thermal protection and casing heater.
- 4 capacity steps with high efficiency at partial loads.
- Water side heat exchanger (evaporator): with stainless steel plates, complete with closed cell polyurethane foam rubber insulation and water flow differential pressure switch (TFAEY) or flow switch (TGAEY).
- Heat exchanger (water-water) in Freecooling NO-GLYCOL: with stainless steel plates, complete with closed cell polyurethane foam rubber insulation and water flow differential pressure switch.
- Air side heat exchanger (condenser): featuring finned coil with copper pipes and aluminium fins.
- Fan: external rotor axial type electric fans equipped with internal thermal protection, accident protection grilles and proportional electronic device for continuous fan rotation speed regulation.
- Control: microprocessor electronic control with Adaptive Function Plus logic.
- Structure: load-bearing structure made of galvanised and painted steel plate with polyester powder coating.
- The unit is also complete with:
  - fan and compressor circuit breaker switches;
  - clock board;
  - water side 3-way modulating valve.

VERSIONS

- T - High efficiency version (TFAETY-TGAETY).
- S - Silenced version complete with compressor technical compartment soundproofing and reduced speed fans (TFAESY - TGAESY).

MODELS

- TFAETY: high efficiency unit in Freecooling mode.
- TFAESY: silenced unit in Freecooling mode.
- TGAETY: high efficiency unit in NO-GLYCOL Freecooling mode.
- TGAESY: silenced unit in NO-GLYCOL Freecooling mode.

FACTORY FITTED ACCESSORIES

- PUMP with single or double electric pump, including an automatic actuation pump in standby complete with safety valve. The electric pumps are available in the low or high head versions.
- TANK&PUMP with integrated 700 litres buffer tank and single or double electric pump, complete with expansion tank, air vent valves, safety valve, and water side pressure gauge.
- Electronic expansion valve.
- Power factor correction capacitors ($\cos\phi > 0.94$).
- Soft starter.
- Cooling circuit high and low pressure gauges.
- Metal filters or coil protection nets.
- Copper/copper or copper/pre-painted aluminium coils.
- Digital input for double set-point.
- 4-20 mA analogue signal for shifting set-point.
- Evaporator antifreeze heater, electric pumps if applicable.
- Interfaces for serial communication with other devices.
- Anti-vibration mounts.

SEPARATELY SUPPLIED ACCESSORIES

- Remote keypad with display.
- Rhoss supervisors for unit monitoring and remote management.

Features

COOL · GAS R410A · OUTDOOR · ADAPTIVE FUNCTION PLUS

	TFAETY-TFAESY MODEL		4160	4180	4200	4230	4260	4290	4320
	FREE-COOLING OFF								
❶	Nominal cooling capacity	kW	178	202	224	251	286	326	361
❶	Nominal cooling capacity	kW	170	197	215	240	274	312	344
❶	E.E.R.		3,31	3,41	3,27	3,2	3,34	3,2	3,09
❶	E.E.R.		3,21	3,32	3,11	3,11	3,22	3,09	2,92
❶	Absorbed power	kW	53,8	59,3	68,4	78,5	85,6	102	117
❶	Absorbed power	kW	53	59,3	69,2	77,2	85,2	100,9	117,9
	FREE-COOLING ON 100%								
❷	Nominal cooling capacity	kW	178	202	224	251	286	326	361
❷	Nominal cooling capacity	kW	170	197	215	240	274	312	344
❷	E.E.R.		21,3	24,4	26,9	20,5	22,8	19,5	21,5
❷	E.E.R.		33	37,8	41,4	31,7	35,2	30	32,9
❷	Absorbed power	kW	8	8	8	12	12	16	16
❷	Absorbed power	kW	5	5	5	7,5	7,5	10	10
❷	Total Free-cooling Temperature	°C	0,3	1	0,4	0,7	0,9	0,4	–0,8
❷	Total Free-cooling Temperature	°C	–1,3	–0,8	–1,5	–1,3	–1,1	–1,6	–3,0
	TFAETY-TFAESY MODEL		**4160**	**4180**	**4200**	**4230**	**4260**	**4290**	**4320**
❸	Sound pressure	dB(A)	60	63	63	65	65	66	66
❸	Sound pressure	dB(A)	55	56	56	58	59	60	60
❹	Sound power	dB(A)	89	91	91	93	93	94	94
❹	Sound power	dB(A)	85	86	86	88	89	90	90
	Scroll compressors/steps	n.	4/4	4/4	4/4	4/4	4/4	4/4	4/4
	Circuits	n.	2	2	2	2	2	2	2
	Electrical supply	V-ph-Hz	400-3+N-50	400-3+N-50	400-3+N-50	400-3+N-50	400-3+N-50	400-3+N-50	400-3+N-50
	DIMENSIONS AND WEIGHTS		**4160**	**4180**	**4200**	**4230**	**4260**	**4290**	**4320**
	L - Width	mm	4.800	4.800	4.800	4.800	5.300	5.300	5.300
	H - Height	mm	2.030	2.030	2.030	2.030	2.030	2.030	2.030
	P - Depth	mm	2.090	2.090	2.090	2.090	2.090	2.090	2.090
❺	TFAETY-TFAESY Weight	kg	2.370	2.820	2.920	3.020	3.230	3.380	3.430
❺	TGAETY-TGAESY Weight	kg	2.470	2.970	3.070	3.170	3.280	3.430	3.480

Data at the following conditions:
❶ Air: 30°C - Water: 15/10°C - Ethylene glycol 30%.
❷ Water: 15/10°C – Ethylene glycol 30%.
❸ In open field (Q = 2) at 10 m from the unit.
❹ Total sound power level in dB(A) based on measurements carried out in accordance with regulation UNI EN-ISO 9614.
❺ Weight referred to the accessorised unit without load.
TFAESY silenced version.

	SEASONAL ENERGY PERFORMANCE		4160	4180	4200	4230	4260	4290	4320
	TFAETY MODEL SEASONAL PERFORMANCE IN COOLING MODE								
⑤	PdesignR	kW	158,2	179,4	198,9	222,8	254	289,5	320,5
⑤	SEPR		5,29	5,39	5,32	5,22	5,33	5,24	5,19
	TFAESY MODEL SEASONAL PERFORMANCE IN COOLING MODE								
⑤	PdesignR	kW	151,2	175,1	191	213,1	243,5	277,1	305,5
⑤	SEPR		5,28	5,31	5,24	5,19	5,27	5,21	5,14
	TGAETY MODEL SEASONAL PERFORMANCE IN COOLING MODE								
⑤	PdesignR	kW	155,3	178,4	197,4	220,6	250,9	286,9	317,1
⑤	SEPR		5,21	5,24	5,24	5,14	5,21	5,14	5,02
	TGAESY MODEL SEASONAL PERFORMANCE IN COOLING MODE								
⑤	PdesignR	kW	148,5	171,6	188,9	211,1	240,7	274,2	300,9
⑤	SEPR		5,1	5,16	5,18	5,16	5,15	5,02	5,02

⑤ Application for high temperature (7°C) process chiller (EU Regulation 2016/2281)

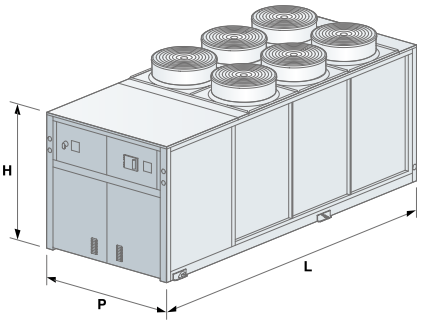

NEW

Web code (TCAETU, TCAEQU, THAETU, THAEQU): **WPE05**
Web code (TCAEBU, TCAESU): **WPE15**

WinPOWER ECO

TCAEU 4370÷8910 / THAEU 4370÷6660

Cooling capacity:
349,7÷910,5 kW

Heating capacity:
368,3÷654,5 kW

TCAETU 6660
with PTL1, BCI accessory

KEY FEATURES

- **Efficient and eco-friendly range in R454B**
- **SEER up to 5.38 with FIEC accessory (EC fans)**
- **B version compact chillers also for replacement markets.**
- **Extended operating limits**
- **Up to 6 capacity steps**
- **Integrated MASTER/SLAVE control**

Air cooled water chillers and reversible heat pumps with axial fans.
Range with scroll hermetic compressors and R454B refrigerant.

CONSTRUCTION FEATURES

- Compressor: scroll type, rotary, hermetic complete with thermal protection and casing heater.
- Up to 6 capacity steps with high efficiency at partial loads.
- Water side heat exchanger: with stainless steel plates, complete with closed cell polyurethane foam rubber insulation, water flow differential pressure switch and Victaulic fittings.
- Air side heat exchanger: featuring micro-channels (TCAEU) or finned coil with copper pipes and aluminium fins (THAEU).
- Fan: external rotor axial type electric fans equipped with internal thermal protection, accident protection grilles and proportional electronic device for continuous fan rotation speed adjustment.
- Control: microprocessor electronic control with Adaptive Function Plus logic.
- Structure: load-bearing structure made of galvanised and painted steel plate with polyester powder coating.
- The unit is also complete with:
- fan and compressor circuit breaker switches;
- display of cooling circuit high and low pressure;
- electronic expansion valve;
- clock board;
- Master/Slave control up to 4 units in parallel;
- control of Variable Primary Flow (VPF_R).

VERSIONS

- B - Standard version (TCAEBU)
- S - Silenced version complete with compressor technical compartment soundproofing and reduced speed fans (TCAESU).
- T - High efficiency version (TCAETU - THAETU).
- Q - Super silenced version complete with compressor technical compartment soundproofing and reduced speed fans (TCAEQU - THAEQU).

MODELS

- TCAEBU: standard unit designed for cooling only.
- TCAESU: silenced unit designed for cooling only.
- TCAETU: high efficiency unit designed for cooling only.
- TCAEQU: super silenced unit designed for cooling only.
- THAETU: high efficiency heat pump unit.
- THAEQU: super silenced heat pump unit.

FACTORY FITTED ACCESSORIES

- Shell and tube evaporator.
- PUMP with single or double electric pump, one of which automatic in standby. The electric pumps are available in the low or high head versions.
- TANK&PUMP with 700 or 1000 litre integrated buffer tank (depending on size) and single or double electric pump, complete with expansion tank, air

Features

TCAETU 6660
with PTL, BCI, FIAP accessory

vent valves, safety valve and water side pressure gauge.
- Inverter pump control for unit start-up.
- Desuperheater.
- 100% heat recovery unit (TCAEU).
- Condensing control with fans with EC motor.
- Condensing control with over-pressure fans (B-T version only).
- Power factor correction capacitors (cosϕ > 0.94).
- Forced limit of power consumption.
- Forced noise limit.
- Energy parameter measuring device.
- Soft starter.
- Soundproofed compressor box or Compressor box and soundproofed cooling circuit (THAEU).
- Compressor soundproof enclosures.
- Cooling circuit outlet and intake valves (TCAEU).
- Cooling circuit outlet valves (THAEU).
- Refrigerant leak detector.
- Cooling circuit high and low pressure gauges.
- Double safety valves
- Coil protection nets or buffer panels.
- Microchannel coils with E-coating treatment, copper/copper, pre-painted copper/aluminium or with hydrophilic treatment depending on versions.
- Control of min/max power supply voltage.
- Digital input for double set-point.
- 4-20 mA analogue signal for shifting set-point.
- Evaporator antifreeze heater, electrical panel, coil tanks, buffer tank, electric pumps and heat exchangers for heat recovery, if applicable.
- Low temperature water production.
- Interfaces for serial communication with other devices.
- Colour touch user keypad (fitted on the machine or remotely) with 7" display.
- Spring anti-vibration mounts.
- Protective packaging.

SEPARATELY SUPPLIED ACCESSORIES

- Remote keypad with display.
- Thermostat with display.
- Rhoss supervisors for unit monitoring and remote management.
- Rhoss sequencer for integrated management of multiple chillers.

WinPOWER ECO

TCAEU 4370÷8910 / THAEU 4370÷6660

	TCAEBU-TCAESU MODEL		4370	4410	4450	5490	5520	5560	6600	6630	6660	7750	7800	8910
❶	Nominal cooling capacity	kW	359,7	393,7	436,6	472,6	502,6	545,6	582,5	613,5	646,4	719,5	760,5	857,4
❶	Nominal cooling capacity	kW	349,7	380,7	420,7	458,6	486,6	527,6	566,5	596,5	626,5	698,5	733,5	824,5
❶	E.E.R.		3,12	3,08	3,06	3,09	3,08	3,05	3,12	3,1	3,09	3,13	3,1	3,01
❶	E.E.R.		2,97	2,89	2,84	2,94	2,92	2,86	2,98	2,95	2,92	3	2,93	2,79
❶	Absorbed power	kW	115,3	127,8	142,7	152,9	163,2	178,9	186,7	197,9	209,2	229,9	245,3	284,9
❶	Absorbed power	kW	117,7	131,7	148,1	156	166,6	184,5	190,1	202,2	214,6	232,8	250,3	295,5
	TCAEBU-TCAESU MODEL		**4370**	**4410**	**4450**	**5490**	**5520**	**5560**	**6600**	**6630**	**6660**	**7750**	**7800**	**8910**
❸	TCAEBU sound pressure	dB(A)	61	61,5	61,5	62,5	62,5	62,5	63	63	64	65	65	66
❸	TCAESU sound pressure	dB(A)	55	56	56	57	57	57	58	58	59	59	59	60
❹	TCAEBU sound power	dB(A)	93	94	94	95	95	95	96	96	97	98	98	99
❹	TCAESU sound power	dB(A)	87	88	88	89	89	89	90	90	91	92	92	93
	Scroll compressors/steps	n.	4/4	4/4	4/4	5/5	5/5	5/5	6/6	6/6	6/6	7/6	7/6	8/6
	Circuits	n.	2	2	2	2	2	2	2	2	2	2	2	2
	Electrical supply	V-ph-Hz	400-3-50											
	DIMENSIONS AND WEIGHTS		**4370**	**4410**	**4450**	**5490**	**5520**	**5560**	**6600**	**6630**	**6660**	**7750**	**7800**	**8910**
	L - Width	mm	3740	3740	3740	4840	4840	4840	5940	5940	5940	7150	7150	7150
	H - Height	mm	2480	2480	2480	2480	2480	2480	2480	2480	2480	2480	2480	2480
	P - Depth	mm	2260	2260	2260	2260	2260	2260	2260	2260	2260	2260	2260	2260
❺	TCAEBU weight	kg	2250	2350	2400	2870	2920	2980	3410	3460	3490	4160	4200	4440
❺	TCAESU weight	kg	2480	2580	2630	3140	3190	3250	3720	3770	3800	4485	4525	4790

Data at the following conditions:
❶ Air: 35°C - Water: 12/7°C.
❸ In open field (Q = 2) at 10 m from the unit.
❹ Total sound power level in dB(A) based on measurements carried out in accordance with regulation UNI EN-ISO 9614.
❺ Weight referred to the unit without load and not accessorised.
TCAESU silenced versions.
Performance according to EN 14511.

	SEASONAL ENERGY PERFORMANCE		4370	4410	4450	5490	5520	5560	6600	6630	6660	7750	7800	8910
	TCAEBU MODEL SEASONAL PERFORMANCE IN COOLING MODE													
①	Pdesignc (EN 14825)	kW	359,7	393,7	436,6	472,6	502,6	545,6	582,5	613,5	646,4	719,5	760,5	857,4
①	SEER (EN 14825)		4,78	4,66	4,63	4,79	4,73	4,67	4,83	4,81	4,77	4,82	4,78	4,72
②	$\eta_{s,c}$	%	188	183	182	189	186	184	190	189	188	190	188	186
	TCAESU MODEL SEASONAL PERFORMANCE IN COOLING MODE													
①	Pdesignc (EN 14825)	kW	349,7	380,7	420,7	458,6	486,6	527,6	566,5	596,5	626,5	698,5	733,5	824,5
①	SEER (EN 14825)		4,74	4,63	4,57	4,72	4,68	4,64	4,79	4,75	4,7	4,75	4,71	4,65
②	$\eta_{s,c}$	%	186	182	180	186	184	183	188	187	185	187	185	183

① Low temperature application (7°C)
② Seasonal energy efficiency: low temperature cooling (EU Regulation 2016/2281)

	TCAETU-TCAEQU MODEL		4370	4410	4450	5490	5520	5560	6600	6630	6660	7750	7800	8910
❶	Nominal cooling capacity	kW	374,7	407,7	450,6	490,6	521,6	562,5	604,5	632,6	664,5	751,5	799,5	910,5
❶	Nominal cooling capacity	kW	365,7	398,7	438,6	479,6	510,6	546,6	593,5	618,6	645,5	731,6	772,5	885,5
❶	E.E.R.		3,36	3,32	3,27	3,3	3,27	3,26	3,28	3,27	3,26	3,31	3,29	3,26
❶	E.E.R.		3,26	3,23	3,12	3,21	3,18	3,12	3,22	3,18	3,12	3,18	3,14	3,12
❶	Absorbed power	kW	111,5	122,8	137,8	148,7	159,5	172,5	184,3	193,5	203,8	227,0	243,0	279,3
❶	Absorbed power	kW	112,2	123,4	140,6	149,4	160,6	175,2	184,3	194,5	206,9	230,1	246,0	283,8
	TCAETU-TCAEQU MODEL		**4370**	**4410**	**4450**	**5490**	**5520**	**5560**	**6600**	**6630**	**6660**	**7750**	**7800**	**8910**
❸	TCAETU sound pressure	dB(A)	62	62,5	62,5	63,5	63,5	63,5	64	64	65	66	66	67
❸	TCAEQU sound pressure	dB(A)	54	54,5	54,5	55,5	55,5	55,5	56	56	56	57	57	58
❹	TCAETU sound power	dB(A)	94	95	95	96	96	96	97	97	98	99	99	100
❹	TCAEQU sound power	dB(A)	86	87	87	88	88	88	89	89	89	90	90	91
	Scroll compressors/steps	n.	4/4	4/4	4/4	5/5	5/5	5/5	6/6	6/6	6/6	7/6	7/6	8/6
	Circuits	n.	2	2	2	2	2	2	2	2	2	2	2	2
	Electrical supply	V-ph-Hz	400-3-50											
	DIMENSIONS AND WEIGHTS		**4370**	**4410**	**4450**	**5490**	**5520**	**5560**	**6600**	**6630**	**6660**	**7750**	**7800**	**8910**
	L - Width	mm	4840	4840	4840	5940	5940	5940	7100	7100	7100	8250	8250	9350
	H - Height	mm	2480	2480	2480	2480	2480	2480	2480	2480	2480	2480	2480	2480
	P - Depth	mm	2260	2260	2260	2260	2260	2260	2260	2260	2260	2260	2260	2260
❺	TCAETU weight	kg	2550	2640	2680	3180	3220	3250	3900	3940	3970	4470	4510	5050
❺	TCAEQU weight	kg	2800	2890	2930	3475	3515	3545	4240	4280	4310	4830	4870	5440

	THAETU-THAEQU MODEL		4370	4410	4450	5490	5520	5560	6600	6630	6660
❷	Nominal heating capacity	kW	374,3	405,3	440,4	488,4	513,4	552,4	597,5	628,4	654,5
❷	Nominal heating capacity	kW	368,3	400,3	434,4	480,4	505,4	544,4	588,5	618,4	645,5
❷	C.O.P.		3,41	3,34	3,32	3,37	3,36	3,35	3,35	3,33	3,34
❷	C.O.P.		3,47	3,41	3,37	3,42	3,41	3,41	3,4	3,38	3,38
❶	Nominal cooling capacity	kW	367,7	400,7	440,6	484,6	505,6	553,5	597,5	623,6	654,5
❶	Nominal cooling capacity	kW	359,7	390,7	429,7	472,6	493,6	538,6	583,5	607,6	637,5
❶	E.E.R.		3,34	3,24	3,21	3,22	3,21	3,2	3,27	3,25	3,24
❶	E.E.R.		3,25	3,14	3,08	3,12	3,1	3,06	3,16	3,13	3,1
❷	Absorbed power	kW	109,8	121,3	132,7	152,8	164,9	178,4	188,7	188,7	196
❷	Absorbed power	kW	106,1	117,4	128,9	140,5	148,2	159,6	173,1	183	191
	THAETU-THAEQU MODEL		**4370**	**4410**	**4450**	**5490**	**5520**	**5560**	**6600**	**6630**	**6660**
❸	THAETU sound pressure	dB(A)	62	62,5	62,5	63,5	63,5	63,5	64	64	65
❸	THAEQU sound pressure	dB(A)	54	54,5	54,5	55,5	55,5	55,5	56	56	56
❹	THAETU sound power	dB(A)	94	95	95	96	96	96	97	97	98
❹	THAEQU sound power	dB(A)	86	87	87	88	88	88	89	89	89
	Scroll compressors/steps	n.	4/4	4/4	4/4	5/5	5/5	5/5	6/6	6/6	6/6
	Circuits	n.	2	2	2	2	2	2	2	2	2
	Electrical supply	V-ph-Hz					400-3-50				
	DIMENSIONS AND WEIGHTS		**4370**	**4410**	**4450**	**5490**	**5520**	**5560**	**6600**	**6630**	**6660**
	L - Width	mm	4840	4840	4840	5940	5940	5940	7100	7100	7100
	H - Height	mm	2480	2480	2480	2480	2480	2480	2480	2480	2480
	P - Depth	mm	2260	2260	2260	2260	2260	2260	2260	2260	2260
❺	THAETU weight	kg	3160	3270	3310	3960	4000	4030	4840	4890	4920
❺	THAEQU weight	kg	3565	3675	3715	4425	4465	4495	5360	5410	5440

Data at the following conditions:
❶ Air: 35°C - Water: 12/7°C.
❷ Air: 7°C, D.B. 6°C W.B.- Water: 40/45°C.
❸ In open field (Q = 2) at 10 m from the unit.
❹ Total sound power level in dB(A) based on measurements carried out in accordance with regulation UNI EN-ISO 9614.
❺ Weight referred to the unit without load and not accessorised.
TCAEQU super-silenced versions.
Performance according to EN 14511.

	SEASONAL ENERGY PERFORMANCE		4370	4410	4450	5490	5520	5560	6600	6630	6660	7750	7800	8910
	TCAETU MODEL SEASONAL PERFORMANCE IN COOLING MODE													
①	Pdesignc (EN 14825)	kW	374,7	407,7	450,6	490,6	521,6	562,5	604,5	632,6	664,5	751,5	799,5	910,5
①	SEER (EN 14825)		4,99	4,84	4,81	4,99	4,92	4,86	5,03	5	4,96	4,97	4,92	4,89
②	$\eta_{s,c}$	%	196	190	189	197	194	191	198	197	195	196	194	193
	TCAEQU MODEL SEASONAL PERFORMANCE IN COOLING MODE													
①	Pdesignc (EN 14825)	kW	365,7	398,7	438,6	479,6	510,6	546,6	593,5	618,6	645,5	731,6	772,5	885,5
①	SEER (EN 14825)		4,95	4,79	4,76	4,97	4,9	4,84	4,99	4,96	4,91	4,91	4,86	4,84
②	$\eta_{s,c}$	%	195	189	187	196	193	191	196	196	193	193	191	190
	THAETU MODEL SEASONAL PERFORMANCE IN COOLING MODE													
①	Pdesignc (EN 14825)	kW	-	-	-	484,6	505,6	553,5	597,5	623,6	654,5			
①	SEER (EN 14825)		-	-	-	4,95	4,86	4,82	4,97	4,96	4,9			
②	$\eta_{s,c}$	%	-	-	-	195	191	190	196	195	193			
	THAEQU MODEL SEASONAL PERFORMANCE IN COOLING MODE													
①	Pdesignc (EN 14825)	kW	-	-	-	-	493,6	538,6	583,5	607,6	637,5			
①	SEER (EN 14825)		-	-	-	-	4,84	4,79	4,94	4,93	4,87			
②	$\eta_{s,c}$	%	-	-	-	-	191	189	195	194	192			
	THAETU MODEL SEASONAL PERFORMANCE IN HEATING MODE													
③	Pdesignh (EN 14825)	kW	307	335	363	-	-	-	-	-	-			
③	SCOP (EN 14825)		3,87	3,83	3,81	-	-	-	-	-	-			
④	η_s	%	152	150	149	-	-	-	-	-	-			
	THAEQU MODEL SEASONAL PERFORMANCE IN HEATING MODE													
③	Pdesignh (EN 14825)	kW	303	330	358	397	-	-	-	-	-			
③	SCOP (EN 14825)		3,93	3,89	3,85	3,88	-	-	-	-	-			
④	η_s	%	154	153	151	152	-	-	-	-	-			

① Low temperature application (7°C)
② Seasonal energy efficiency: low temperature cooling (EU Regulation 2016/2281)
③ In Average climatic conditions, low temperature application (35°C)
④ Seasonal energy efficiency: low temperature heating in Average climate (EU Regulations No.811/2013 and No.813/2013)

WinPOWER HE-A

TCAEY 4385÷8920 / THAEY 4385÷6700

Cooling capacity:
354,2÷916,8 kW

Heating capacity:
383,3÷698,9 kW

TCAETY 4415
with BCI, PTL, RPE accessory

KEY FEATURES

- **High energy efficiency chillers**
- **Extended operating limits**
- **Up to 6 capacity steps**
- **Multi-purpose for systems with 2 pipes + DHW (with optional RC100)**
- **Built-in MASTER/ SLAVE control**

Air cooled water chillers and reversible heat pumps with axial fans.
Range with scroll hermetic compressors and R410A refrigerant.

CONSTRUCTION FEATURES

- Compressor: scroll type, rotary, hermetic complete with thermal protection and casing heater.
- Up to 6 capacity steps with high efficiency at partial loads.
- Water side heat exchanger: with stainless steel plates, complete with closed cell polyurethane foam rubber insulation, water flow differential pressure switch and Victaulic fittings.
- Air side heat exchanger: featuring micro-channels (TCAEY) or finned coil with copper pipes and aluminium fins (THAEY).
- Fan: external rotor axial type electric fans, equipped with internal thermal protection, accident protection grilles and a proportional electronic device for continuous fan rotation speed regulation (T version; fans with an EC motor are standard in the Q version).
- Control: microprocessor electronic control with Adaptive Function Plus logic.
- Structure: load-bearing structure made of galvanised and painted steel plate with polyester powder coating.
- The unit is also complete with:
  - fan and compressor circuit breaker switches;
  - display of cooling circuit high and low pressure;
  - electronic expansion valve;
  - clock board;
  - Master/Slave control up to 4 units in parallel;
  - control of Variable Primary Flow (VPF_R).

VERSIONS

- T - High efficiency version with oversized condensing section (TCAETY - THAETY).
- Q - Super-silenced version complete with compressor technical compartment soundproofing, reduced speed fans and oversized condensing section (TCAEQY-THAEQY).

MODELS

- TCAETY: high efficiency unit designed for cooling only.
- TCAEQY: super silenced unit designed for cooling only.
- THAETY: high efficiency heat pump unit.
- THAEQY: super silenced heat pump unit.

FACTORY FITTED ACCESSORIES

- Shell and tube evaporator.
- PUMP with single or double electric pump, one of which automatic in standby. The electric pumps are available in the low or high head versions.
- TANK&PUMP with 700 or 1000 litre integrated buffer tank (depending on size) and single or double electric pump, complete with expansion tank, air vent valves, safety valve and water side pressure gauge.
- Inverter pump control for unit start-up (TCAETY, TCAEQY, THAEQY).

Features

TCAEQY 8920

THAETY 4460
with BFI accessory

- Desuperheater.
- 100% heat recovery unit.
- Condensing control with fans with EC motor (standard in Q versions).
- Condensing control with over-pressure fans.
- Power factor correction capacitors (cosϕ > 0.94).
- Forced limit of power consumption.
- Forced noise limit.
- Energy parameter measuring device.
- Soft starter.
- Soundproofed compressor box or Compressor box and soundproofed cooling circuit (THAEY).
- Compressor soundproof enclosures.
- Cooling circuit outlet and inlet valves.
- Refrigerant leak detector.
- Cooling circuit high and low pressure gauges.
- Double safety valves
- Metal filters (THAEY) or coil protection nets.
- Microchannel coils with E-coating treatment, copper/copper or pre-painted copper/aluminium depending on the versions.
- Control of min/max power supply voltage.
- Digital input for double set-point.
- 4-20 mA analogue signal for shifting set-point.
- Evaporator antifreeze heater, electrical panel, buffer tank, electric pumps and heat exchangers for heat recovery, if applicable.
- Low temperature water production.
- Interfaces for serial communication with other devices.
- Anti-vibration mounts.

SEPARATELY SUPPLIED ACCESSORIES

- Remote keypad with display.
- Thermostat with display.
- Rhoss supervisors for unit monitoring and remote management.
- Rhoss sequencer for integrated management of multiple chillers.

WinPOWER HE-A

TCAEY 4385÷8920 / THAEY 4385÷6700

	TCAETY-TCAEQY MODEL		4385	4415	4460	5525	6570	6625
❶	Nominal cooling capacity	kW	385	414	460,8	524,5	569,5	623,1
❶	Nominal cooling capacity	kW	372,1	400	440,9	492,7	535,7	585,4
❶	E.E.R.		3,24	3,16	3,13	3,19	3,17	3,1
❶	E.E.R.		3,12	2,97	2,9	2,98	2,89	2,7
❶	Absorbed power	kW	118,9	131,1	147,3	164,5	179,7	201
❶	Absorbed power	kW	119,3	134,7	152	165,3	185,4	216,8
	TCAETY-TCAEQY MODEL		**4385**	**4415**	**4460**	**5525**	**6570**	**6625**
❸	TCAETY sound pressure	dB(A)	62,5	63,5	64,5	64,5	64,5	64,5
❸	TCAEQY sound pressure	dB(A)	54,5	54,5	55,5	55,5	55,5	55,5
❹	TCAETY sound power	dB(A)	95	96	97	97	97	97
❹	TCAEQY sound power	dB(A)	87	87	88	88	88	88
	Scroll compressors/steps	n.	4/4	4/4	4/4	5/5	6/6	6/6
	Circuits	n.	2	2	2	2	2	2
	Electrical supply	V-ph-Hz	400-3-50	400-3-50	400-3-50	400-3-50	400-3-50	400-3-50
	DIMENSIONS AND WEIGHTS		**4385**	**4415**	**4460**	**5525**	**6570**	**6625**
	L - Width	mm	4840	4840	4840	5940	5940	5940
	H - Height	mm	2450	2450	2450	2450	2450	2450
	P - Depth	mm	2260	2260	2260	2260	2260	2260
❺	TCAETY weight	kg	2440	2460	2510	2980	3200	3210
❺	TCAEQY weight	kg	2715	2735	2785	3300	3565	3575

	THAETY-THAEQY MODEL		4385	4415	4460	5525	6570	6625
❷	Nominal heating capacity	kW	386,9	425	464,2	520,4	571,5	626,8
❷	Nominal heating capacity	kW	383,3	420,8	458,3	512,5	556,2	622,1
❷	C.O.P.		3,2	3,2	3,2	3,2	3,2	3,2
❷	C.O.P.		3,33	3,3	3,3	3,28	3,28	3,29
❶	Nominal cooling capacity	kW	359,2	399	439,9	498,7	538,6	584,4
❶	Nominal cooling capacity	kW	354,2	385,1	421,1	474,8	507,8	546,6
❶	E.E.R.		2,97	2,96	2,95	3,02	2,95	2,9
❶	E.E.R.		2,91	2,82	2,75	2,84	2,72	2,53
❷	Absorbed power	kW	121	132,9	145,1	162,7	178,6	195,9
❷	Absorbed power	kW	115,1	127,5	138,9	156,3	169,6	189,1
	THAETY-THAEQY MODEL		**4385**	**4415**	**4460**	**5525**	**6570**	**6625**
❸	THAETY sound pressure	dB(A)	62,5	63,5	64,5	64,5	64,5	64,5
❸	THAEQY sound pressure	dB(A)	54,5	54,5	55,5	55,5	55,5	55,5
❹	THAETY sound power	dB(A)	95	96	97	97	97	97
❹	THAEQY sound power	dB(A)	87	87	88	88	88	88
	Scroll compressors/steps	n.	4/4	4/4	4/4	5/5	6/6	6/6
	Circuits	n.	2	2	2	2	2	2
	Electrical supply	V-ph-Hz	400-3-50	400-3-50	400-3-50	400-3-50	400-3-50	400-3-50
	DIMENSIONS AND WEIGHTS		**4385**	**4415**	**4460**	**5525**	**6570**	**6625**
	L - Width	mm	4840	4840	4840	5940	5940	5940
	H - Height	mm	2450	2450	2450	2450	2450	2450
	P - Depth	mm	2260	2260	2260	2260	2260	2260
❺	THAETY weight	kg	3030	3200	3250	3830	4040	4070
❺	THAEQY weight	kg	3395	3565	3615	4310	4520	4550

Data at the following conditions:

❶ Air: 35°C - Water: 12/7°C.

❷ Air: 7°C, D.B. 6°C W.B.- Water: 40/45°C.

❸ In open field (Q = 2) at 10 m from the unit.

❹ Total sound power level in dB(A) based on measurements carried out in accordance with regulation UNI EN-ISO 9614.

❺ Weight referred to the unit without load and not accessorised.

☐ TCAEQY super-silenced versions.

Performance according to EN 14511.

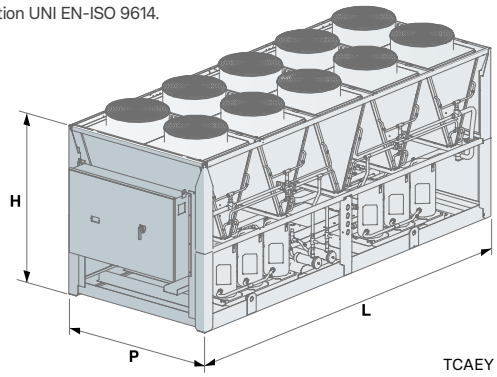

TCAEY

	SEASONAL ENERGY PERFORMANCE		4385	4415	4460	5525	6570	6625
	TCAETY MODEL SEASONAL PERFORMANCE IN COOLING MODE							
①	Pdesignc (EN 14825)	kW	385	414	460,8	524,5	569,5	623,1
①	SEER (EN 14825)		4,78	4,75	4,77	4,76	4,78	4,77
②	$\eta_{s,c}$	%	188	187	188	187	188	188
	TCAEQY MODEL SEASONAL PERFORMANCE IN COOLING MODE							
①	Pdesignc (EN 14825)	kW	372,1	400	440,9	492,7	535,7	585,4
①	SEER (EN 14825)		4,91	4,91	4,89	4,91	4,86	4,87
②	$\eta_{s,c}$	%	193	193	192	193	191	192
	THAETY MODEL SEASONAL PERFORMANCE IN COOLING MODE							
①	Pdesignc (EN 14825)	kW	-	-	439,9	498,7	538,6	584,3
①	SEER (EN 14825)		-	-	4,68	4,68	4,66	4,67
②	$\eta_{s,c}$	%	-	-	184	184	184	184
	THAEQY MODEL SEASONAL PERFORMANCE IN COOLING MODE							
①	Pdesignc (EN 14825)	kW	-	-	421,1	474,8	507,8	546,6
①	SEER (EN 14825)		-	-	4,81	4,81	4,82	4,81
②	$\eta_{s,c}$	%	-	-	189	189	190	189
	THAETY MODEL SEASONAL PERFORMANCE IN HEATING MODE							
③	Pdesignh (EN 14825)	kW	354	388	-	-	-	-
③	SCOP (EN 14825)		3,53	3,56	-	-	-	-
④	η_s	%	138	139	-	-	-	-
	THAEQY MODEL SEASONAL PERFORMANCE IN HEATING MODE							
③	Pdesignh (EN 14825)	kW	350	385	-	-	-	-
③	SCOP (EN 14825)		3,8	3,8	-	-	-	-
④	η_s	%	149	149	-	-	-	-

① Low temperature application (7°C)

② Seasonal energy efficiency: low temperature cooling (EU Regulation 2016/2281)

③ In Average climatic conditions, low temperature application (35°C)

④ Seasonal energy efficiency: low temperature heating in Average climate (EU Regulations No.811/2013 and No.813/2013)

WinPOWER HE-A

TCAEY 4385÷8920 / THAEY 4385÷6700

	TCAETY-TCAEQY MODEL		6665	6700	7760	8820	8870	8920
❶	Nominal cooling capacity	kW	665,3	695,2	758,3	819,9	870	916,8
❶	Nominal cooling capacity	kW	634,5	663,5	728,6	790,1	830,2	867,6
❶	E.E.R.		3,16	3,13	3,14	3,15	3,14	3,13
❶	E.E.R.		2,96	2,91	2,93	2,93	2,9	2,86
❶	Absorbed power	kW	210,6	222,2	241,5	260,3	277,1	293
❶	Absorbed power	kW	214,4	228	248,7	269,7	286,3	303,4
	TCAETY-TCAEQY MODEL		**6665**	**6700**	**7760**	**8820**	**8870**	**8920**
❸	TCAETY sound pressure	dB(A)	65,5	65,5	65,5	65,5	66	67
❸	TCAEQY sound pressure	dB(A)	56,5	57,5	58	58	59	60
❹	TCAETY sound power	dB(A)	98	98	98	98	99	100
❹	TCAEQY sound power	dB(A)	89	90	91	91	92	93
	Scroll compressors/steps	n.	6/6	6/6	7/6	8/6	8/6	8/6
	Circuits	n.	2	2	2	2	2	2
	Electrical supply	V-ph-Hz	400-3-50	400-3-50	400-3-50	400-3-50	400-3-50	400-3-50
	DIMENSIONS AND WEIGHTS		**6665**	**6700**	**7760**	**8820**	**8870**	**8920**
	L - Width	mm	7100	7100	8250	9350	9350	9350
	H - Height	mm	2450	2450	2450	2450	2450	2450
	P - Depth	mm	2260	2260	2260	2260	2260	2260
❺	TCAETY weight	kg	3715	3740	4250	4650	4750	4770
❺	TCAEQY weight	kg	4080	4105	4655	5105	5205	5225

	THAETY-THAEQY MODEL		6665	6700
❷	Nominal heating capacity	kW	662,6	698,9
❷	Nominal heating capacity	kW	656,1	687,4
❷	C.O.P.		3,21	3,22
❷	C.O.P.		3,33	3,32
❶	Nominal cooling capacity	kW	633,5	660,3
❶	Nominal cooling capacity	kW	606,7	631,5
❶	E.E.R.		3,02	2,97
❶	E.E.R.		2,8	2,78
❷	Absorbed power	kW	206,5	217,1
❷	Absorbed power	kW	197	207
	THAETY-THAEQY MODEL		**6665**	**6700**
❸	THAETY sound pressure	dB(A)	65,5	65,5
❸	THAEQY sound pressure	dB(A)	56,5	57,5
❹	THAETY sound power	dB(A)	98	98
❹	THAEQY sound power	dB(A)	89	90
	Scroll compressors/steps	n.	6/6	6/6
	Circuits	n.	2	2
	Electrical supply	V-ph-Hz	400-3-50	400-3-50
	DIMENSIONS AND WEIGHTS		**6665**	**6700**
	L - Width	mm	6840	6840
	H - Height	mm	2450	2450
	P - Depth	mm	2260	2260
❺	THAETY weight	kg	4680	4710
❺	THAEQY weight	kg	5210	5240

Data at the following conditions:
❶ Air: 35°C - Water: 12/7°C.
❷ Air: 7°C, D.B. 6°C W.B.- Water: 40/45°C.
❸ In open field (Q = 2) at 10 m from the unit.
❹ Total sound power level in dB(A) based on measurements carried out in accordance with regulation UNI EN-ISO 9614.
❺ Weight referred to the unit without load and not accessorised.
TCAEQY super-silenced versions.
Performance according to EN 14511.

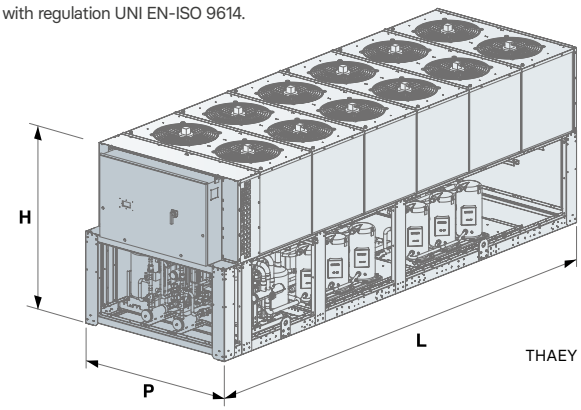

THAEY

	SEASONAL ENERGY PERFORMANCE		6665	6700	7760	8820	8870	8920
	TCAETY MODEL SEASONAL PERFORMANCE IN COOLING MODE							
①	Pdesignc (EN 14825)	kW	665,3	695,2	758,3	819,9	870	916,8
①	SEER (EN 14825)		4,76	4,77	4,77	4,76	4,76	4,77
②	$\eta_{s,c}$	%	187	188	188	188	187	188
	TCAEQY MODEL SEASONAL PERFORMANCE IN COOLING MODE							
①	Pdesignc (EN 14825)	kW	634,5	663,5	728,6	790,1	830,2	867,6
①	SEER (EN 14825)		4,88	4,9	4,85	4,86	4,88	4,87
②	$\eta_{s,c}$	%	192	193	191	191	192	192
	THAETY MODEL SEASONAL PERFORMANCE IN COOLING MODE							
①	Pdesignc (EN 14825)	kW	633,5	660,3	-	-	-	-
①	SEER (EN 14825)		4,65	4,68	-	-	-	-
②	$\eta_{s,c}$	%	183	184	-	-	-	-
	THAEQY MODEL SEASONAL PERFORMANCE IN COOLING MODE							
①	Pdesignc (EN 14825)	kW	606,7	631,5	-	-	-	-
①	SEER (EN 14825)		4,83	4,84	-	-	-	-
②	$\eta_{s,c}$	%	190	191	-	-	-	-
	THAETY MODEL SEASONAL PERFORMANCE IN HEATING MODE							
③	Pdesignh (EN 14825)	kW	-	-	-	-	-	-
③	SCOP (EN 14825)		-	-	-	-	-	-
④	η_s	%	-	-	-	-	-	-
	THAEQY MODEL SEASONAL PERFORMANCE IN HEATING MODE							
③	Pdesignh (EN 14825)	kW	-	-	-	-	-	-
③	SCOP (EN 14825)		-	-	-	-	-	-
④	η_s	%	-	-	-	-	-	-

① Low temperature application (7°C)
② Seasonal energy efficiency: low temperature cooling (EU Regulation 2016/2281)
③ In Average climatic conditions, low temperature application (35°C)
④ Seasonal energy efficiency: low temperature heating in Average climate (EU Regulations No.811/2013 and No.813/2013)

WinPOWER SE

TCAEY 4360÷8860

Cooling capacity:
359,8÷861,8 kW

TCAEBY 4435 with Tank&Pump and RPB, RPE accessories

KEY FEATURES

- **Version B compact and high-performance for replacement markets**
- **Up to 6 capacity steps**
- **Simplified installation thanks to pumping unit accessories**
- **Built-in MASTER/ SLAVE control**

Air cooled water chillers with axial fans. Range with scroll hermetic compressors and R410A refrigerant.

CONSTRUCTION FEATURES

- Compressor: scroll type, rotary, hermetic complete with thermal protection and casing heater.
- Up to 6 capacity steps with high efficiency at partial loads.
- Water side heat exchanger: with stainless steel plates, complete with closed cell polyurethane foam rubber insulation, water flow differential pressure switch and Victaulic fittings.
- Air side heat exchanger: with micro-channels.
- Fan: external rotor axial type electric fans equipped with internal thermal protection, accident protection grilles and proportional electronic device for continuous fan rotation speed regulation.
- Control: microprocessor electronic control with Adaptive Function Plus logic.
- Structure: load-bearing structure made of galvanised and painted steel plate with polyester powder coating.
- The unit is also complete with:
  - fan and compressor circuit breaker switches;
  - display of cooling circuit high and low pressure;
  - electronic expansion valve;
  - clock board;
  - Master/Slave control up to 4 units in parallel;
  - control of Variable Primary Flow (VPF_R).

VERSIONS

- B - Base version (TCAEBY).

MODELS

- TCAEBY: unit intended for cooling only.

FACTORY FITTED ACCESSORIES

- Shell and tube evaporator.
- PUMP with single or double electric pump, one of which automatic in standby. The electric pumps are available in the low or high head versions.
- TANK&PUMP with 700 or 1000 litre integrated buffer tank (depending on size) and single or double electric pump, complete with expansion tank, air vent valves, safety valve and water side pressure gauge.
- Desuperheater.
- 100% heat recovery unit.
- Condensing control with fans with EC motor.
- Condensing control with over-pressure fans.
- Power factor correction capacitors (cosϕ > 0.94).
- Forced limit of power consumption.
- Forced noise limit.
- Energy parameter measuring device.
- Soft starter.
- Soundproofed compressor box.
- Compressor soundproof enclosures.
- Cooling circuit outlet and inlet valves.
- Refrigerant leak detector.
- Cooling circuit high and low pressure gauges.
- Double safety valves.

Features

TCAEBY 8860
with BCI accessory

- Coil protection nets.
- Micro-channel coils with E-coating treatment.
- Control of min/max power supply voltage.
- Digital input for double set-point.
- 4-20 mA analogue signal for shifting set-point.
- Evaporator antifreeze heater, electrical panel, buffer tank, electric pumps and heat exchangers for heat recovery, if applicable.
- Low temperature water production.
- Interfaces for serial communication with other devices.
- Anti-vibration mounts.

SEPARATELY SUPPLIED ACCESSORIES

- Remote keypad with display.
- Thermostat with display.
- Rhoss supervisors for unit monitoring and remote management.
- Rhoss sequencer for integrated management of multiple chillers.

WinPOWER SE

TCAEY 4360÷8860

	TCAEBY MODEL		4360	4390	4435	5500	6540	6590
❶	Nominal cooling capacity	kW	359,8	389,6	434,6	496,3	538,9	587,9
❶	E.E.R.		2,9	2,84	2,81	2,96	2,9	2,77
❶	Absorbed power	kW	124,1	137,2	154,7	167,7	185,9	212,3
	TCAEBY MODEL		**4360**	**4390**	**4435**	**5500**	**6540**	**6590**
❷	Sound pressure	dB(A)	62	63	64	64	64	64
❸	Sound power	dB(A)	94	95	96	96	96	96
	Scroll compressors/steps	n.	4/4	4/4	4/4	5/5	6/6	6/6
	Circuits	n.	2	2	2	2	2	2
	Electrical supply	V-ph-Hz	400-3-50	400-3-50	400-3-50	400-3-50	400-3-50	400-3-50
	DIMENSIONS AND WEIGHTS		**4360**	**4390**	**4435**	**5500**	**6540**	**6590**
	L - Width	mm	3740	3740	3740	4840	4840	4840
	H - Height	mm	2450	2450	2450	2450	2450	2450
	P - Depth	mm	2260	2260	2260	2260	2260	2260
❹	TCAEBY weight	kg	2130	2140	2200	2670	2860	2890

Data at the following conditions:
❶ Air: 35°C - Water: 12/7°C.
❷ In open field (Q = 2) at 10 m from the unit.
❸ Total sound power level in dB(A) based on measurements carried out in accordance with regulation UNI EN-ISO 9614.
❹ Weight referred to the unit without load and not accessorised.
Performance according to EN 14511.

	SEASONAL ENERGY PERFORMANCE		4360	4390	4435	5500	6540	6590
	TCAEBY MODEL SEASONAL PERFORMANCE IN COOLING MODE							
①	Pdesignc (EN 14825)	kW	359,8	389,6	434,6	496,3	538,9	587,9
①	SEER (EN 14825)		4,6	4,59	4,58	4,58	4,61	4,56
②	$\eta_{s,c}$	%	181	180	180	180	181	179

① Low temperature application (7°C)
② Seasonal energy efficiency: low temperature cooling (EU Regulation 2016/2281)

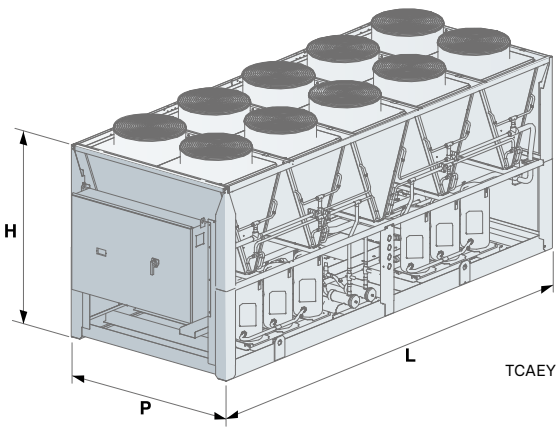

	TCAEBY MODEL		6635	6670	7730	8790	8830	8860
❶	Nominal cooling capacity	kW	637,7	666,5	732,4	784	827,1	861,8
❶	E.E.R.		2,93	2,9	2,93	2,84	2,81	2,8
❶	Absorbed power	kW	217,7	229,9	250	276,1	294,4	307,8
	TCAEBY MODEL		**6635**	**6670**	**7730**	**8790**	**8830**	**8860**
❷	Sound pressure	dB(A)	64,5	64,5	64,5	64,5	65	66
❸	Sound power	dB(A)	97	97	97	97	98	99
	Scroll compressors/steps	n.	6/6	6/6	7/6	8/6	8/6	8/6
	Circuits	n.	2	2	2	2	2	2
	Electrical supply	V-ph-Hz	400-3-50	400-3-50	400-3-50	400-3-50	400-3-50	400-3-50
	DIMENSIONS AND WEIGHTS		**6635**	**6670**	**7730**	**8790**	**8830**	**8860**
	L - Width	mm	5940	5940	7150	7150	7150	7150
	H - Height	mm	2450	2450	2450	2450	2450	2450
	P - Depth	mm	2260	2260	2260	2260	2260	2260
❹	TCAEBY weight	kg	3205	3230	3870	4020	4100	4120

Data at the following conditions:
❶ Air: 35°C - Water: 12/7°C.
❷ In open field (Q = 2) at 10 m from the unit.
❸ Total sound power level in dB(A) based on measurements carried out in accordance with regulation UNI EN-ISO 9614.
❹ Weight referred to the unit without load and not accessorised.
Performance according to EN 14511.

	SEASONAL ENERGY PERFORMANCE		6635	6670	7730	8790	8830	8860
	TCAEBY MODEL SEASONAL PERFORMANCE IN COOLING MODE							
①	Pdesignc (EN 14825)	kW	637,7	666,5	732,4	784	827,1	861,8
①	SEER (EN 14825)		4,6	4,6	4,57	4,58	4,57	4,57
②	$\eta_{s,c}$	%	181	181	180	180	180	180

① Low temperature application (7°C)
② Seasonal energy efficiency: low temperature cooling (EU Regulation 2016/2281)

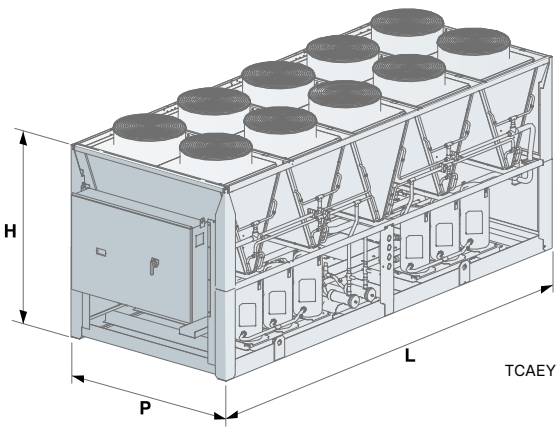

NEW

Web code (TCAITL, TCAIQL): **FPV33**
Web code (TCAITZ, TCAIQZ): **FPV31**

FullPOWER EVO VFD

TCAIT-TCAIQ 2565÷21495

Cooling capacity:
550,4÷1504,1 kW

TCAIT 21495
with BCIP accessory

KEY FEATURES

- **Screw compressors with variable Vi, suitable for all applications**
- **Continuous power adjustment from 12.5 to 100%**
- **SEER up to 5,49 with FIEC accessory (EC fans)**
- **R513A and R134a**
- **Wide range of accessories**
- **Integrated MASTER/SLAVE control**

Packaged air-cooled water chillers with axial fans. Series with semi-hermetic screw compressors with variable Vi, inverter adjustment and R513A or R134a refrigerant gas

CONSTRUCTION FEATURES

- Compressor: high energy efficiency semi-hermetic screw compressor with variable Vi intrinsic compression ratio, star-delta limited start-up, inverter rotation adjustment (12.5-100%), complete with integral protection, casing heater, oil level sensor and refrigerant gas outlet piping shut-off valve.
- Water side heat exchanger: dry expansion shell and tube exchanger with counterflow heat exchange, complete with closed cell polyurethane foam rubber insulation, water flow differential pressure switch and Victaulic fittings.
- Air side heat exchanger: with micro-channels.
- Fan: external rotor axial type electric fans equipped with internal thermal protection, accident protection grilles and proportional electronic device for continuous fan rotation speed adjustment.
- Control: microprocessor electronic control.
- Structure: made of galvanised and painted steel plate with polyester powder coating.
- The unit is also complete with:
  - display of cooling circuit high/low pressure;
  - electronic expansion valve;
  - oil level sensor;
  - clock board;
  - Master/Slave control up to 4 units in parallel;
  - control of Variable Primary Flow (VPF_R).

VERSIONS

- T - High efficiency version with oversized condensing section (TCAITL-TCAITZ).
- Q - Super-silenced version complete with compressor technical compartment soundproofing, reduced speed fans and oversized condensing section (TCAIQL-TCAIQZ).

MODELS

- TCAITL: high efficiency unit designed for cooling only with R513A gas.
- TCAIQL: super silenced unit designed for cooling only with R513A gas.
- TCAITZ: high efficiency unit designed for cooling only with R134a gas.
- TCAIQZ: super silenced unit designed for cooling only with R134a gas.

FACTORY FITTED ACCESSORIES

- PUMP with single or double electric pump, one of which automatic in standby. The electric pumps are available in the low or high head versions.
- Inverter pump control for unit start-up.
- Desuperheater.
- 100% heat recovery unit.
- Condensing control with fans with EC motor.
- Condensing control with over-pressure fans (T version only).
- Power factor correction capacitors (cosϕ > 0.94).
- Compressor circuit breaker switches.
- Electro-mechanical flow switch.
- EMC anti-disturbance filters.
- Forced limit of power consumption.
- Forced noise limit.
- Energy parameter measuring device.
- Soundproofed compressor box.
- Cooling circuit intake valves.
- Refrigerant leak detector.
- Cooling circuit high and low pressure gauges.
- Double safety valves.
- Coil protection nets or buffer panels.
- Microchannel coils with E-coating treatment, copper/aluminium, copper/copper, pre-painted copper/aluminium.
- Control of min/max power supply voltage.
- Digital input for double set-point.
- 4-20 mA analogue signal for shifting set-point.
- Evaporator antifreeze heater, electrical panel, electric pumps and heat exchangers for heat recovery if applicable.
- Interfaces for serial communication with other devices.
- Colour touch user keypad (fitted on the machine or remotely) with 7" display.
- Spring anti-vibration mounts.
- Protective packaging.

SEPARATELY SUPPLIED ACCESSORIES

- Remote keypad with display.
- Thermostat with display.
- Rhoss supervisors for unit monitoring and remote management.
- Rhoss sequencer for integrated management of multiple chillers.

Features

COOL · SCREW COMPRESSOR · INVERTER · LOW GWP · GAS R134a · GAS R513A · OUTDOOR · EUROVENT CERTIFIED PERFORMANCE www.eurovent-certification.com

	TCAITL-TCAIQL MODEL		2565	2615	2685	2775	2845	2945	21005	21195	21365	21495
❶	Nominal cooling capacity	kW	568,4	616,5	686,4	779,4	852,3	951,3	1010,3	1190,2	1358,3	1497,1
❶	Nominal cooling capacity	kW	550,4	601,5	670,4	756,4	829,3	923,4	985,3	1153,2	1315,3	1451,2
❶	E.E.R.		3,13	3,13	3,11	3,15	3,12	3,15	3,07	3,03	3,1	3,05
❶	E.E.R.		2,92	3,01	2,9	2,95	2,86	2,94	2,89	2,8	2,88	2,88
❶	Absorbed power	kW	181,6	197	220,7	247,4	273,2	302	329,1	392,8	438,2	490,9
❶	Absorbed power	kW	188,5	199,8	231,2	256,4	290	314,1	340,9	411,9	456,7	503,9
	TCAITL-TCAIQL MODEL		**2565**	**2615**	**2685**	**2775**	**2845**	**2945**	**21005**	**21195**	**21365**	**21495**
❷	Sound pressure	dB(A)	69	70	70	71	71	72	72	72	73	73
❷	Sound pressure	dB(A)	61	61	61	62	63	63	64	64	65	65
❸	Sound power	dB(A)	102	103	103	104	104	105	105	105	106	106
❸	Sound power	dB(A)	94	94	94	95	96	96	97	97	98	98
	Screw compressors	n.					2					
	Circuits	n.	2	2	2	2	2	2	2	2	2	2
	Electrical supply	V-ph-Hz	400-3-50	400-3-50	400-3-50	400-3-50	400-3-50	400-3-50	400-3-50	400-3-50	400-3-50	400-3-50
	DIMENSIONS AND WEIGHTS		**2565**	**2615**	**2685**	**2775**	**2845**	**2945**	**21005**	**21195**	**21365**	**21495**
	L - Width	mm	6090	7250	7250	8350	8350	10550	10550	10550	11650	12810
	H - Height	mm	2480	2480	2480	2480	2480	2480	2480	2480	2480	2480
	P - Depth	mm	2260	2260	2260	2260	2260	2260	2260	2260	2260	2260
❹	TCAITL weight	kg	4320	4770	4870	5210	5330	6030	6140	7290	8185	9280
❹	TCAIQL weight	kg	4700	5170	5270	5610	5730	6430	6540	7710	8605	9720

	SEASONAL ENERGY PERFORMANCE		2565	2615	2685	2775	2845	2945	21005	21195	21365	21495
	TCAITL MODEL SEASONAL PERFORMANCE IN COOLING MODE											
①	Pdesignc (EN 14825)	kW	568,4	616,5	686,4	779,4	852,3	951,3	1010,3	1190,2	1358,3	1497,1
①	SEER (EN 14825)		5,3	5,23	5,28	5,27	5,23	5,26	5,28	5,2	5,26	5,19
②	$\eta_{s,c}$	%	209	206	208	208	206	207	208	205	208	205
	TCAIQL MODEL SEASONAL PERFORMANCE IN COOLING MODE											
①	Pdesignc (EN 14825)	kW	550,4	601,5	670,4	756,4	829,3	923,4	985,3	1153,2	1315,3	1451,2
①	SEER (EN 14825)		5,19	5,12	5,17	5,17	5,13	5,17	5,17	5,1	5,19	5,13
②	$\eta_{s,c}$	%	205	202	204	204	202	204	204	201	205	202

	TCAITZ-TCAIQZ MODEL		2565	2615	2685	2775	2845	2945	21005	21195	21365	21495
❶	Nominal cooling capacity	kW	570,4	619,5	689,4	782,4	856,3	955,3	1015,3	1195,2	1364,3	1504,1
❶	Nominal cooling capacity	kW	552,4	604,5	673,4	759,4	833,3	927,4	989,3	1158,2	1321,3	1458,2
❶	E.E.R.		3,21	3,21	3,2	3,23	3,21	3,23	3,15	3,11	3,17	3,13
❶	E.E.R.		3	3,09	2,98	3,02	2,94	3,02	2,96	2,87	2,95	2,95
❶	Absorbed power	kW	177,7	193	215,4	242,2	266,8	295,8	322,3	384,3	430,4	480,5
❶	Absorbed power	kW	184,1	195,6	226	251,5	283,4	307,1	334,2	403,6	447,9	494,3
	TCAITZ-TCAIQZ MODEL		**2565**	**2615**	**2685**	**2775**	**2845**	**2945**	**21005**	**21195**	**21365**	**21495**
❷	Sound pressure	dB(A)	69	70	70	71	71	72	72	72	73	73
❷	Sound pressure	dB(A)	61	61	61	62	63	63	64	64	65	65
❸	Sound power	dB(A)	102	103	103	104	104	105	105	105	106	106
❸	Sound power	dB(A)	94	94	94	95	96	96	97	97	98	98
	Screw compressors/steps	n.					2					
	Circuits	n.	2	2	2	2	2	2	2	2	2	2
	Electrical supply	V-ph-Hz	400-3-50	400-3-50	400-3-50	400-3-50	400-3-50	400-3-50	400-3-50	400-3-50	400-3-50	400-3-50
	DIMENSIONS AND WEIGHTS		**2565**	**2615**	**2685**	**2775**	**2845**	**2945**	**21005**	**21195**	**21365**	**21495**
	L - Width	mm	6090	7250	7250	8350	8350	10550	10550	10550	11650	12810
	H - Height	mm	2480	2480	2480	2480	2480	2480	2480	2480	2480	2480
	P - Depth	mm	2260	2260	2260	2260	2260	2260	2260	2260	2260	2260
❹	TCAITZ weight	kg	4320	4770	4870	5210	5330	6030	6140	7290	8185	9280
❹	TCAIQZ weight	kg	4700	5170	5270	5610	5730	6430	6540	7710	8605	9720

	SEASONAL ENERGY PERFORMANCE		2565	2615	2685	2775	2845	2945	21005	21195	21365	21495
	TCAITZ MODEL SEASONAL PERFORMANCE IN COOLING MODE											
①	Pdesignc (EN 14825)	kW	570,4	619,5	689,4	782,4	856,3	955,3	1015,3	1195,2	1364,3	1504,1
①	SEER (EN 14825)		5,33	5,27	5,32	5,29	5,28	5,28	5,32	5,23	5,32	5,25
②	$\eta_{s,c}$	%	210	208	210	209	208	208	210	206	210	207
	TCAIQZ MODEL SEASONAL PERFORMANCE IN COOLING MODE											
①	Pdesignc (EN 14825)	kW	552,4	604,5	673,4	759,4	833,3	927,4	989,3	1158,2	1321,3	1458,2
①	SEER (EN 14825)		5,23	5,18	5,21	5,22	5,17	5,2	5,2	5,14	5,23	5,15
②	$\eta_{s,c}$	%	206	204	205	206	204	205	205	202	206	203

Data at the following conditions:

❶ Air: 35°C - Water: 12/7°C.

❷ In open field (Q = 2) at 10 m from the unit.

❸ Total sound power level in dB(A) based on measurements carried out in accordance with regulation UNI EN-ISO 9614.

❹ Weight referred to the unit without load and not accessorised.

TCAIQL-TCAIQZ super-silenced versions.

Performance according to EN 14511.

① Low temperature application (7°C)

② Seasonal energy efficiency: low temperature cooling (EU Regulation 2016/2281)

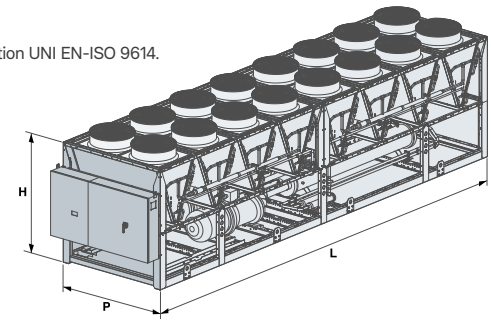

NEW

Web code (TCAITL, TCAIQL): **FPV43**
Web code (TCAITZ, TCAIQZ): **FPV41**

FullPOWER EVO VFD (1+i)

TCAIT-TCAIQ 2560÷21500

Cooling capacity:
548,4÷1510,1 kW

TCAIT 2560
with BCIP accessory

KEY FEATURES

- **Continuous power adjustment from 12.5 to 100%**
- **SEER up to 5,23 with FIEC accessory (EC fans)**
- **R513A and R134a**
- **Wide range of accessories**
- **Integrated MASTER/SLAVE control**

Packaged air-cooled water chillers with axial fans. Series with stepless semi-hermetic screw compressors and variable Vi with inverter adjustment and R513A or R134a refrigerant gas.

CONSTRUCTION FEATURES

- Compressor: high energy efficiency semi-hermetic screw driven by fixed speed motor with linear capacity control and variable Vi regulated by inverter (12.5-100%), limited inrush start-up, complete with integral protection, casing heater, oil level sensor and shut-off valve on refrigerant gas outlet piping.
- Water side heat exchanger: dry expansion shell and tube exchanger with counterflow heat exchange, complete with closed cell polyurethane foam rubber insulation, water flow differential pressure switch and Victaulic fittings.
- Air side heat exchanger: with micro-channels.
- Fan: external rotor axial type electric fans equipped with internal thermal protection, accident protection grilles and proportional electronic device for continuous fan rotation speed adjustment.
- Control: microprocessor electronic control.
- Structure: made of galvanised and painted steel plate with polyester powder coating.
- The unit is also complete with:
  - display of cooling circuit high/low pressure;
  - electronic expansion valve;
  - oil level sensor;
  - clock board;
  - Master/Slave control up to 4 units in parallel;
  - control of Variable Primary Flow (VPF_R).

VERSIONS

- T - High efficiency version with oversized condensing section (TCAITL-TCAITZ).
- Q - Super-silenced version complete with compressor technical compartment soundproofing, reduced speed fans and oversized condensing section (TCAIQL-TCAIQZ).

MODELS

- TCAITL: high efficiency unit designed for cooling only with R513A gas.
- TCAIQL: super silenced unit designed for cooling only with R513A gas.
- TCAITZ: high efficiency unit designed for cooling only with R134a gas.
- TCAIQZ: super silenced unit designed for cooling only with R134a gas.

FACTORY FITTED ACCESSORIES

- PUMP with single or double electric pump, one of which automatic in standby. The electric pumps are available in the low or high head versions.
- Inverter pump control for unit start-up.
- Desuperheater.
- 100% heat recovery unit.
- Condensing control with fans with EC motor.
- Condensing control with over-pressure fans (T version only).
- Power factor correction capacitors (cosϕ > 0.94).
- Compressor circuit breaker switches.
- Electro-mechanical flow switch.
- EMC anti-disturbance filters.
- Forced limit of power consumption.
- Forced noise limit.
- Energy parameter measuring device.
- Soft starter.
- Soundproofed compressor box.
- Cooling circuit intake valves.
- Refrigerant leak detector.
- Cooling circuit high and low pressure gauges.
- Double safety valves.
- Coil protection nets or buffer panels.
- Microchannel coils with E-coating treatment, copper/aluminium, copper/copper, pre-painted copper/aluminium.
- Control of min/max power supply voltage.
- Digital input for double set-point.
- 4-20 mA analogue signal for shifting set-point.
- Evaporator antifreeze heater, electrical panel, electric pumps and heat exchangers for heat recovery if applicable.
- Interfaces for serial communication with other devices.
- Colour touch keypad (fitted on the machine or remotely) with 7" display.
- Spring anti-vibration mounts.
- Protective packaging.

SEPARATELY SUPPLIED ACCESSORIES

- Remote keypad with display.
- Thermostat with display.
- Rhoss supervisors for unit monitoring and remote management.
- Rhoss sequencer for integrated management of multiple chillers.

Features

COOL · SCREW COMPRESSOR · INVERTER · LOW GWP · GAS R134a · GAS R513A · OUTDOOR · EUROVENT CERTIFIED PERFORMANCE www.eurovent-certification.com

	TCAITL-TCAIQL MODEL		2560	2600	2670	2710	2770	2860	2930	2980	21080	21160	21310	21500
❶	Nominal cooling capacity	kW	567,4	607,5	677,4	719,4	773,4	869,3	941,3	987,3	1089,2	1173,2	1319,1	1503,1
❶	Nominal cooling capacity	kW	548,4	584,5	657,4	694,4	746,4	839,3	908,4	953,3	1051,3	1126,2	1266,1	1452,2
❶	E.E.R.		3,14	3,18	3,16	3,15	3,2	3,17	3,25	3,22	3,18	3,06	3,16	3,05
❶	E.E.R.		2,93	3,02	2,91	2,86	2,96	2,87	2,96	2,96	2,9	2,86	2,88	2,89
❶	Absorbed power	kW	180,7	191	214,4	228,4	241,7	274,2	289,6	306,6	342,5	383,4	417,4	492,8
❶	Absorbed power	kW	187,2	193,5	225,9	242,8	252,2	292,4	306,9	322,1	362,5	393,8	439,6	502,5
	TCAITL-TCAIQL MODEL		**2560**	**2600**	**2670**	**2710**	**2770**	**2860**	**2930**	**2980**	**21080**	**21160**	**21310**	**21500**
❷	Sound pressure	dB(A)	68	69	69	69	70	70	71	71	71	71	72	73
❷	Sound pressure	dB(A)	60	60	60	60	61	62	62	62	63	63	64	65
❸	Sound power	dB(A)	101	102	102	102	103	103	104	104	104	104	105	106
❸	Sound power	dB(A)	93	93	93	93	94	95	95	95	96	96	97	98
	Screw compressors	n.						1 inverter + 1						
	Circuits	n.	2	2	2	2	2	2	2	2	2	2	2	2
	Electrical supply	V-ph-Hz						400-3-50						
	DIMENSIONS AND WEIGHTS		**2560**	**2600**	**2670**	**2710**	**2770**	**2860**	**2930**	**2980**	**21080**	**21160**	**21310**	**21500**
	L - Width	mm	6090	7250	7250	7250	8350	8350	9450	10550	10550	10550	11650	12810
	H - Height	mm	2480	2480	2480	2480	2480	2480	2480	2480	2480	2480	2480	2480
	P - Depth	mm	2260	2260	2260	2260	2260	2260	2260	2260	2260	2260	2260	2260
❹	TCAITL weight	kg	4490	4890	4960	4970	5830	5930	6410	6680	6790	7150	7530	9680
❹	TCAIQL weight	kg	4870	5290	5360	5370	6230	6330	6810	7080	7190	7550	7930	10120

	SEASONAL ENERGY PERFORMANCE		2560	2600	2670	2710	2770	2860	2930	2980	21080	21160	21310	21500
	TCAITL MODEL SEASONAL PERFORMANCE IN COOLING MODE													
①	Pdesignc (EN 14825)	kW	567,4	607,5	677,4	719,4	773,4	869,3	941,3	987,3	1089,2	1173,2	1319,1	1503,1
①	SEER (EN 14825)		5,02	4,94	4,96	4,97	4,96	4,98	4,94	4,96	4,96	4,95	4,96	4,96
②	$\eta_{s,c}$	%	198	195	195	196	195	196	195	196	196	195	195	195
	TCAIQL MODEL SEASONAL PERFORMANCE IN COOLING MODE													
①	Pdesignc (EN 14825)	kW	548,4	584,5	657,4	694,4	746,4	839,3	908,4	953,3	1051,3	1126,2	1266,1	1452,2
①	SEER (EN 14825)		4,92	4,86	4,88	4,86	4,87	4,9	4,86	4,87	4,87	4,85	4,87	4,87
②	$\eta_{s,c}$	%	194	192	192	191	192	193	191	192	192	191	192	192

	TCAITZ-TCAIQZ MODEL		2560	2600	2670	2710	2770	2860	2930	2980	21080	21160	21310	21500
❶	Nominal cooling capacity	kW	569,4	610,5	680,4	722,4	776,4	873,3	945,3	991,3	1094,2	1178,2	1325,1	1510,1
❶	Nominal cooling capacity	kW	550,4	586,5	660,4	697,4	749,4	843,3	912,4	957,3	1056,3	1131,2	1272,1	1459,2
❶	E.E.R.		3,22	3,27	3,25	3,23	3,28	3,25	3,33	3,3	3,26	3,14	3,24	3,13
❶	E.E.R.		3	3,09	2,99	2,94	3,03	2,95	3,03	3,04	2,98	2,93	2,95	2,96
❶	Absorbed power	kW	176,8	186,7	209,4	223,7	236,7	268,7	283,9	300,4	335,6	375,2	409	482,5
❶	Absorbed power	kW	183,5	189,8	220,9	237,2	247,3	285,9	301,1	314,9	354,5	386,1	431,2	493
	TCAITZ-TCAIQZ MODEL		**2560**	**2600**	**2670**	**2710**	**2770**	**2860**	**2930**	**2980**	**21080**	**21160**	**21310**	**21500**
❷	Sound pressure	dB(A)	68	69	69	69	70	70	71	71	71	71	72	73
❷	Sound pressure	dB(A)	60	60	60	60	61	62	62	62	63	63	64	65
❸	Sound power	dB(A)	101	102	102	102	103	103	104	104	104	104	105	106
❸	Sound power	dB(A)	93	93	93	93	94	95	95	95	96	96	97	98
	Screw compressors	n.						1 inverter + 1						
	Circuits	n.	2	2	2	2	2	2	2	2	2	2	2	2
	Electrical supply	V-ph-Hz						400-3-50						
	DIMENSIONS AND WEIGHTS		**2560**	**2600**	**2670**	**2710**	**2770**	**2860**	**2930**	**2980**	**21080**	**21160**	**21310**	**21500**
	L - Width	mm	6090	7250	7250	7250	8350	8350	9450	10550	10550	10550	11650	12810
	H - Height	mm	2480	2480	2480	2480	2480	2480	2480	2480	2480	2480	2480	2480
	P - Depth	mm	2260	2260	2260	2260	2260	2260	2260	2260	2260	2260	2260	2260
❹	TCAITZ weight	kg	4490	4890	4960	4970	5830	5930	6410	6680	6790	7150	7530	9680
❹	TCAIQZ weight	kg	4870	5290	5360	5370	6230	6330	6810	7080	7190	7550	7930	10120

	SEASONAL ENERGY PERFORMANCE		2560	2600	2670	2710	2770	2860	2930	2980	21080	21160	21310	21500
	TCAITZ MODEL SEASONAL PERFORMANCE IN COOLING MODE													
①	Pdesignc (EN 14825)	kW	569,4	610,5	680,4	722,4	776,4	873,3	945,3	991,3	1094,2	1178,2	1325,1	1510,1
①	SEER (EN 14825)		5,08	5,01	5,03	5	5,01	5,04	5,03	5	5,01	5	5,02	5
②	$\eta_{s,c}$	%	200	197	198	197	197	199	198	197	197	197	198	197
	TCAIQZ MODEL SEASONAL PERFORMANCE IN COOLING MODE													
①	Pdesignc (EN 14825)	kW	550,4	586,5	660,4	697,4	749,4	843,3	912,4	957,3	1056,3	1131,2	1272,1	1459,2
①	SEER (EN 14825)		4,98	4,91	4,91	4,91	4,9	4,93	4,9	4,91	4,93	4,88	4,91	4,9
②	$\eta_{s,c}$	%	196	193	193	193	193	194	193	193	194	192	193	193

Data at the following conditions:

❶ Air: 35°C - Water: 12/7°C.

❷ In open field (Q = 2) at 10 m from the unit.

❸ Total sound power level in dB(A) based on measurements carried out in accordance with regulation UNI EN-ISO 9614.

❹ Weight referred to the unit without load and not accessorised.

TCAIQL-TCAIQZ super-silenced versions.

Performance according to EN 14511.

① Low temperature application (7°C)

② Seasonal energy efficiency: low temperature cooling (EU Regulation 2016/2281)

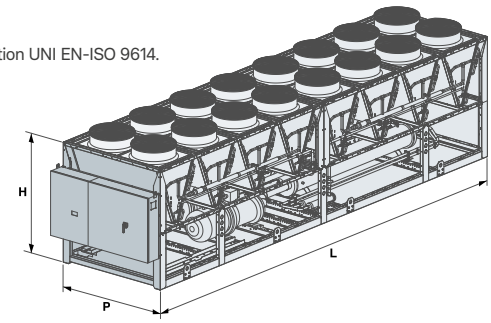

NEW

Web code (TCAVTL, TCAVQL): **FPE23**
Web code (TCAVBL): **FP023**
Web code (TCAVTZ, TCAVQZ): **FPE21**
Web code (TCAVBZ): **FP021**

FullPOWER EVO

TCAVB 2335÷21505
TCAVT-TCAVQ 2345÷21565

Cooling capacity:
336,6÷1564,1 kW

TCAVT 2425
with FIAP and BCI accessory

Packaged air-cooled water chillers with axial fans. Series with semi-hermetic screw compressors and R513A or R134a refrigerant gas.

KEY FEATURES

- **High energy efficiency chillers in R513A and R134a**
- **Extended operating limits**
- **Linear capacity control (25-100%)**
- **Wide range of accessories**
- **Integrated MASTER/SLAVE control**

CONSTRUCTION FEATURES

- Compressor: high energy efficiency semi-hermetic screw compressor with linear capacity control (25-100%). Star-delta limited start-up and complete with integral protection, casing heater and refrigerant gas outlet piping shut-off valve.
- Water side heat exchanger: dry expansion shell and tube exchanger with counterflow heat exchange, complete with closed cell polyurethane foam rubber insulation, water flow differential pressure switch and Victaulic fittings.
- Air side heat exchanger: with micro-channels.
- Fan: external rotor axial type electric fans equipped with internal thermal protection, accident protection grilles and proportional electronic device for continuous fan rotation speed adjustment.
- Control: microprocessor electronic control.
- Structure: made of galvanised and painted steel plate with polyester powder coating.
- The unit is also complete with:
  - display of cooling circuit high/low pressure;
  - electronic expansion valve;
  - clock board;
  - Master/Slave control up to 4 units in parallel;
  - control of Variable Primary Flow (VPF_R).

VERSIONS

- B - Standard efficiency version (TCAVBL-TCAVBZ).
- T - High efficiency version with oversized condensing section (TCAVTL-TCAVTZ).
- Q - Super-silenced version complete with soundproof compressor technical compartment, reduced speed fans and oversized condensing section (TCAVQL-TCAVQZ).

MODELS

- TCAVBL: standard efficiency unit designed for cooling only with R513A gas.
- TCAVTL: high efficiency unit designed for cooling only with R513A gas.
- TCAVQL: super silenced unit designed for cooling only with R513A gas.
- TCAVBZ: standard efficiency unit designed for cooling only with R134a gas.
- TCAVTZ: high efficiency unit designed for cooling only with R134a gas.
- TCAVQZ: super silenced unit designed for cooling only with R134a gas.

FACTORY FITTED ACCESSORIES

- PUMP with single or double electric pump, one of which automatic in standby. The electric pumps are available in the low or high head versions.
- Inverter pump control for unit start-up.
- Desuperheater.
- 100% heat recovery unit.
- Condensing control with fans with EC motor
- Condensing control with over-pressure fans (B-T versions only)
- Power factor correction capacitors (cosϕ > 0.94).
- Compressor circuit breaker switches.
- Electro-mechanical flow switch.
- Oil level sensor.
- Forced limit of power consumption.
- Forced noise limit.
- Energy parameter measuring device.
- Soft starter.
- Soundproofed compressor box.
- Cooling circuit intake valves.

Features

COOL · SCREW COMPRESSOR · LOW GWP · GAS R134a · GAS R513A · OUTDOOR · EUROVENT CERTIFIED PERFORMANCE www.eurovent-certification.com

TCAVTL 21175
with BCI, RC100 heat recovery and RPB coil protection nets accessories

- Refrigerant leak detector.
- Cooling circuit high and low pressure gauges.
- Double safety valves.
- Coil protection nets or buffer panels
- Microchannel coils with E-coating treatment, copper/aluminium, copper/copper, pre-painted copper/aluminium
- Control of min/max power supply voltage.
- Digital input for double set-point.
- 4-20 mA analogue signal for shifting set-point.
- Evaporator antifreeze heater, electrical panel, electric pumps and heat exchangers for heat recovery if applicable.
- Low temperature water production.
- Interfaces for serial communication with other devices.
- Colour touch user keypad (fitted on the machine or remotely) with 7" display
- Spring anti-vibration mounts
- Protective packaging

SEPARATELY SUPPLIED ACCESSORIES

- Remote keypad with display.
- Thermostat with display.
- Rhoss supervisors for unit monitoring and remote management.
- Rhoss sequencer for integrated management of multiple chillers.

FullPOWER EVO

TCAVB 2335÷21505
TCAVT-TCAVQ 2345÷21565

GAS R513A

	TCAVBL MODEL		2335	2365	2405	2465	2515	2565	2645	2705	2755
❶	Nominal cooling capacity	kW	333,6	370,6	406,5	464,5	520,4	565,4	650,4	708,4	758,4
❶	E.E.R.		3	2,91	2,85	3	2,89	2,84	2,95	2,9	2,87
❶	Absorbed power	kW	111,2	127,4	142,6	154,8	180,1	199,1	220,5	244,3	264,3
	TCAVBL MODEL		**2335**	**2365**	**2405**	**2465**	**2515**	**2565**	**2645**	**2705**	**2755**
❷	Sound pressure	dB(A)	65	65	66	66	66	66	66,5	66,5	67,5
❸	Sound power	dB(A)	97	97	98	98	98	98	99	99	100
	Screw compressors	n.					2				
	Circuits	n.	2	2	2	2	2	2	2	2	2
	Electrical supply	V-ph-Hz	400-3-50	400-3-50	400-3-50	400-3-50	400-3-50	400-3-50	400-3-50	400-3-50	400-3-50
	DIMENSIONS AND WEIGHTS		**2335**	**2365**	**2405**	**2465**	**2515**	**2565**	**2645**	**2705**	**2755**
	L - Width	mm	3740	3740	3740	4840	4840	4840	5990	5990	5990
	H - Height	mm	2480	2480	2480	2480	2480	2480	2480	2480	2480
	P - Depth	mm	2260	2260	2260	2260	2260	2260	2260	2260	2260
❹	TCAVBL weight	kg	2760	2770	2790	3220	3780	3990	4330	4360	4390

	TCAVTL-TCAVQL MODEL		2345	2385	2425	2475	2525	2585	2655	2715	2765
❶	Nominal cooling capacity	kW	343,6	383,6	427,6	478,5	532,4	583,4	664,4	719,4	772,3
❶	Nominal cooling capacity	kW	333,7	372,6	410,6	474,5	511,5	560,4	638,5	698,4	749,3
❶	E.E.R.		3,24	3,21	3,19	3,24	3,2	3,19	3,27	3,23	3,22
❶	E.E.R.		3,15	3,1	3,02	3,11	3,03	2,94	3,03	2,93	2,88
❶	Absorbed power	kW	106	119,5	134	147,7	166,4	182,9	203,2	222,7	239,8
❶	Absorbed power	kW	105,9	120,2	136	152,6	168,8	190,6	210,7	238,4	260,2
	TCAVTL-TCAVQL MODEL		**2345**	**2385**	**2425**	**2475**	**2525**	**2585**	**2655**	**2715**	**2765**
❷	TCAVTL Sound pressure	dB(A)	65,5	65,5	65,5	65,5	65,5	66,5	66,5	66,5	67
❷	TCAVQL Sound pressure	dB(A)	56,5	56,5	56,5	56,5	56,5	57,5	57,5	57,5	58
❸	TCAVTL Sound power	dB(A)	98	98	98	98	98	99	99	99	100
❸	TCAVQL Sound power	dB(A)	89	89	89	89	89	90	90	90	91
	Screw compressors	n.					2				
	Circuits	n.	2	2	2	2	2	2	2	2	2
	Electrical supply	V-ph-Hz	400-3-50	400-3-50	400-3-50	400-3-50	400-3-50	400-3-50	400-3-50	400-3-50	400-3-50
	DIMENSIONS AND WEIGHTS		**2345**	**2385**	**2425**	**2475**	**2525**	**2585**	**2655**	**2715**	**2765**
	L - Width	mm	4840	4840	4840	5990	5990	5990	7150	7150	7150
	H - Height	mm	2480	2480	2480	2480	2480	2480	2480	2480	2480
	P - Depth	mm	2260	2260	2260	2260	2260	2260	2260	2260	2260
❹	TCAVTL weight	kg	3120	3125	3150	3515	4270	4300	4810	4840	4860
❹	TCAVQL weight	kg	3395	3400	3425	3790	4650	4680	5210	5240	5260

Data at the following conditions:

❶ Air: 35°C - Water: 12/7°C.

❷ In open field (Q = 2) at 10 m from the unit.

❸ Total sound power level in dB(A) based on measurements carried out in accordance with regulation UNI EN-ISO 9614.

❹ Weight referred to the unit without load and not accessorised.

TCAVQL super-silenced versions.

Performance according to EN 14511.

	SEASONAL ENERGY PERFORMANCE										
	TCAVBL MODEL SEASONAL PERFORMANCE IN COOLING MODE		**2335**	**2365**	**2405**	**2465**	**2515**	**2565**	**2645**	**2705**	**2755**
①	Pdesignc (EN 14825)	kW	333,6	370,6	406,5	464,5	520,4	565,4	650,4	708,4	758,4
①	SEER (EN 14825)		4,62	4,59	4,57	4,64	4,58	4,55	4,62	4,59	4,57
②	$\eta_{s,c}$	%	182	181	180	183	180	179	182	181	180
	TCAVTL MODEL SEASONAL PERFORMANCE IN COOLING MODE		**2345**	**2385**	**2425**	**2475**	**2525**	**2585**	**2655**	**2715**	**2765**
①	Pdesignc (EN 14825)	kW	343,6	383,6	427,6	478,5	532,4	583,4	664,4	719,4	772,3
①	SEER (EN 14825)		4,8	4,72	4,71	4,77	4,71	4,72	4,77	4,76	4,76
②	$\eta_{s,c}$	%	189	186	185	188	185	186	188	187	188
	TCAVQL MODEL SEASONAL PERFORMANCE IN COOLING MODE		**2345**	**2385**	**2425**	**2475**	**2525**	**2585**	**2655**	**2715**	**2765**
①	Pdesignc (EN 14825)	kW	333,7	372,6	410,6	474,5	511,5	560,4	638,5	698,4	749,3
①	SEER (EN 14825)		4,73	4,63	4,61	4,72	4,68	4,61	4,69	4,67	4,66
②	$\eta_{s,c}$	%	186	182	181	186	184	181	185	184	183

① Low temperature application (7°C)

② Seasonal energy efficiency: low temperature cooling (EU Regulation 2016/2281)

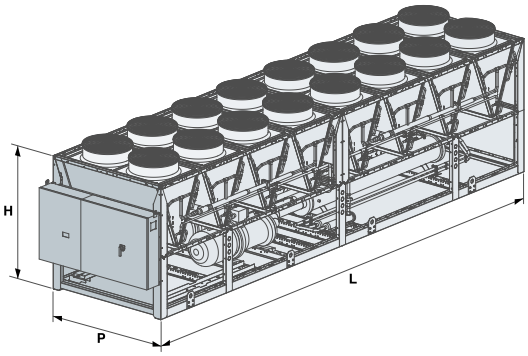

	TCAVBL MODEL		2805	2865	2935	2995	21075	21115	21275	21405	21505
❶	Nominal cooling capacity	kW	799,4	865,3	944,3	994,2	1081,3	1121,2	1287,1	1399,1	1503,2
❶	E.E.R.		2,96	2,88	2,97	2,91	3,03	2,93	3,04	2,94	2,92
❶	Absorbed power	kW	270,1	300,5	317,9	341,6	356,9	382,7	423,4	475,9	514,8
	TCAVBL MODEL		**2805**	**2865**	**2935**	**2995**	**21075**	**21115**	**21275**	**21405**	**21505**
❷	Sound pressure	dB(A)	67,5	68	68	68	69	69	69	70	71
❸	Sound power	dB(A)	100	101	101	101	102	102	102	103	104
	Screw compressors	n.					2				
	Circuits	n.	2	2	2	2	2	2	2	2	2
	Electrical supply	V-ph-Hz	400-3-50	400-3-50	400-3-50	400-3-50	400-3-50	400-3-50	400-3-50	400-3-50	400-3-50
	DIMENSIONS AND WEIGHTS		**2805**	**2865**	**2935**	**2995**	**21075**	**21115**	**21275**	**21405**	**21505**
	L - Width	mm	7150	7150	8250	8250	9350	9350	10450	11550	11550
	H - Height	mm	2480	2480	2480	2480	2480	2480	2480	2480	2480
	P - Depth	mm	2260	2260	2260	2260	2260	2260	2260	2260	2260
❹	TCAVBL weight	kg	5400	5820	6210	6270	6780	6800	7180	8560	9010

	TCAVTL-TCAVQL MODEL		2815	2885	2955	21025	21105	21175	21335	21455	21565
❶	Nominal cooling capacity	kW	820,4	887,3	964,3	1029,3	1116,2	1176,2	1327,1	1443,2	1557,1
❶	Nominal cooling capacity	kW	788,4	847,3	926,4	998,3	1072,3	1123,2	1281,1	1400,3	1501,2
❶	E.E.R.		3,26	3,21	3,29	3,22	3,25	3,17	3,18	3,12	3,08
❶	E.E.R.		3,01	2,92	3,02	2,95	3	2,89	2,91	2,92	2,86
❶	Absorbed power	kW	251,7	276,4	293,1	319,7	343,4	371	417,3	462,6	505,6
❶	Absorbed power	kW	261,9	290,2	306,8	338,4	357,4	388,7	440,2	479,6	524,9
	TCAVTL-TCAVQL MODEL		**2815**	**2885**	**2955**	**21025**	**21105**	**21175**	**21335**	**21455**	**21565**
❷	TCAVTL Sound pressure	dB(A)	67	68	68	68	69	69	69	70	71
❷	TCAVQL Sound pressure	dB(A)	59	60	60	60	60	61	61	62	63
❸	TCAVTL Sound power	dB(A)	100	101	101	101	102	102	102	103	104
❸	TCAVQL Sound power	dB(A)	92	93	93	93	93	94	94	95	96
	Screw compressors	n.					2				
	Circuits	n.	2	2	2	2	2	2	2	2	2
	Electrical supply	V-ph-Hz	400-3-50	400-3-50	400-3-50	400-3-50	400-3-50	400-3-50	400-3-50	400-3-50	400-3-50
	DIMENSIONS AND WEIGHTS		**2815**	**2885**	**2955**	**21025**	**21105**	**21175**	**21335**	**21455**	**21565**
	L - Width	mm	8250	8250	9350	9350	10450	10450	11550	12710	12710
	H - Height	mm	2480	2480	2480	2480	2480	2480	2480	2480	2480
	P - Depth	mm	2260	2260	2260	2260	2260	2260	2260	2260	2260
❹	TCAVTL weight	kg	5705	6135	6680	6745	7130	7150	7555	9390	9850
❹	TCAVQL weight	kg	6105	6535	7080	7145	7530	7550	7955	9810	10270

Data at the following conditions:

❶ Air: 35°C - Water: 12/7°C.

❷ In open field (Q = 2) at 10 m from the unit.

❸ Total sound power level in dB(A) based on measurements carried out in accordance with regulation UNI EN-ISO 9614.

❹ Weight referred to the unit without load and not accessorised.

☐ TCAVQL super-silenced versions.

Performance according to EN 14511.

	SEASONAL ENERGY PERFORMANCE										
	TCAVBL MODEL SEASONAL PERFORMANCE IN COOLING MODE		**2805**	**2865**	**2935**	**2995**	**21075**	**21115**	**21275**	**21405**	**21505**
①	Pdesignc (EN 14825)	kW	799,4	865,3	944,3	994,2	1081,3	1121,2	1287,1	1399,1	1503,2
①	SEER (EN 14825)		4,58	4,57	4,6	4,58	4,59	4,59	4,62	4,56	4,58
②	$\eta_{s,c}$	%	180	180	181	180	181	181	182	179	180
	TCAVTL MODEL SEASONAL PERFORMANCE IN COOLING MODE		**2815**	**2885**	**2955**	**21025**	**21105**	**21175**	**21335**	**21455**	**21565**
①	Pdesignc (EN 14825)	kW	820,4	887,3	964,3	1029,3	1116,2	1176,2	1327,1	1443,2	1557,1
①	SEER (EN 14825)		4,74	4,7	4,73	4,72	4,77	4,71	4,74	4,74	4,72
②	$\eta_{s,c}$	%	186	185	186	186	188	185	186	187	186
	TCAVQL MODEL SEASONAL PERFORMANCE IN COOLING MODE		**2815**	**2885**	**2955**	**21025**	**21105**	**21175**	**21335**	**21455**	**21565**
①	Pdesignc (EN 14825)	kW	788,4	847,3	926,4	998,3	1072,3	1123,2	1281,1	1400,3	1501,2
①	SEER (EN 14825)		4,63	4,63	4,64	4,61	4,67	4,63	4,63	4,68	4,63
②	$\eta_{s,c}$	%	182	182	182	181	184	182	182	184	182

① Low temperature application (7°C)

② Seasonal energy efficiency: low temperature cooling (EU Regulation 2016/2281)

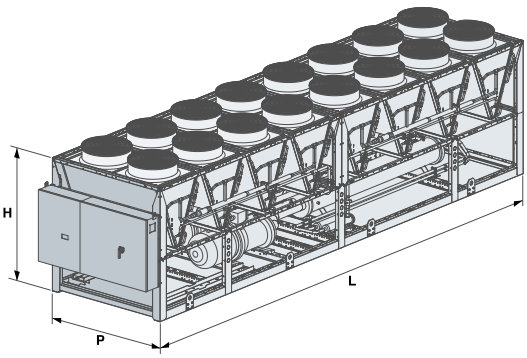

FullPOWER EVO

TCAVB 2335÷21505
TCAVT-TCAVQ 2345÷21565

GAS R134a

	TCAVBZ MODEL		2335	2365	2405	2465	2515	2565	2645	2705	2755
❶	Nominal cooling capacity	kW	334,6	371,6	408,5	466,5	522,3	567,4	653,4	711,4	761,4
❶	E.E.R.		3,09	2,98	2,93	3,07	2,97	2,9	3,03	2,97	2,95
❶	Absorbed power	kW	108,3	124,7	139,4	152	175,9	195,7	215,6	239,5	258,1
	TCAVBZ MODEL		**2335**	**2365**	**2405**	**2465**	**2515**	**2565**	**2645**	**2705**	**2755**
❷	Sound pressure	dB(A)	65	65	66	66	66	66	66,5	66,5	67,5
❸	Sound power	dB(A)	97	97	98	98	98	98	99	99	100
	Screw compressors	n.					2				
	Circuits	n.	2	2	2	2	2	2	2	2	2
	Electrical supply	V-ph-Hz	400-3-50	400-3-50	400-3-50	400-3-50	400-3-50	400-3-50	400-3-50	400-3-50	400-3-50
	DIMENSIONS AND WEIGHTS		**2335**	**2365**	**2405**	**2465**	**2515**	**2565**	**2645**	**2705**	**2755**
	L - Width	mm	3740	3740	3740	4840	4840	4840	5990	5990	5990
	H - Height	mm	2480	2480	2480	2480	2480	2480	2480	2480	2480
	P - Depth	mm	2260	2260	2260	2260	2260	2260	2260	2260	2260
❹	TCAVBZ weight	kg	2760	2770	2790	3220	3780	3990	4330	4360	4390

	TCAVTZ-TCAVQZ MODEL		2345	2385	2425	2475	2525	2585	2655	2715	2765
❶	Nominal cooling capacity	kW	344,6	384,6	429,6	480,5	534,4	585,4	667,4	722,4	775,3
❶	Nominal cooling capacity	kW	334,7	373,6	412,6	476,5	513,5	562,4	641,5	701,4	752,3
❶	E.E.R.		3,34	3,3	3,27	3,32	3,3	3,28	3,35	3,32	3,3
❶	E.E.R.		3,25	3,18	3,1	3,18	3,11	3,02	3,11	3	2,96
❶	Absorbed power	kW	103,2	116,5	131,4	144,7	161,9	178,5	199,2	217,6	234,9
❶	Absorbed power	kW	103	117,5	133,1	149,8	165,1	186,2	206,3	233,8	254,2
	TCAVTZ-TCAVQZ MODEL		**2345**	**2385**	**2425**	**2475**	**2525**	**2585**	**2655**	**2715**	**2765**
❷	TCAVTZ Sound pressure	dB(A)	65,5	65,5	65,5	65,5	65,5	66,5	66,5	66,5	67
❷	TCAVQZ Sound pressure	dB(A)	56,5	56,5	56,5	56,5	56,5	57,5	57,5	57,5	58
❸	TCAVTZ Sound power	dB(A)	98	98	98	98	98	99	99	99	100
❸	TCAVQZ Sound power	dB(A)	89	89	89	89	89	90	90	90	91
	Screw compressors	n.					2				
	Circuits	n.	2	2	2	2	2	2	2	2	2
	Electrical supply	V-ph-Hz	400-3-50	400-3-50	400-3-50	400-3-50	400-3-50	400-3-50	400-3-50	400-3-50	400-3-50
	DIMENSIONS AND WEIGHTS		**2345**	**2385**	**2425**	**2475**	**2525**	**2585**	**2655**	**2715**	**2765**
	L - Width	mm	4840	4840	4840	5990	5990	5990	7150	7150	7150
	H - Height	mm	2480	2480	2480	2480	2480	2480	2480	2480	2480
	P - Depth	mm	2260	2260	2260	2260	2260	2260	2260	2260	2260
❹	TCAVTZ weight	kg	3120	3125	3150	3515	4270	4300	4810	4840	4860
❹	TCAVQZ weight	kg	3395	3400	3425	3790	4650	4680	5210	5240	5260

Data at the following conditions:
❶ Air: 35°C - Water: 12/7°C.
❷ In open field (Q = 2) at 10 m from the unit.
❸ Total sound power level in dB(A) based on measurements carried out in accordance with regulation UNI EN-ISO 9614.
❹ Weight referred to the unit without load and not accessorised.
TCAVQZ super-silenced versions.
Performance according to EN 14511.

	SEASONAL ENERGY PERFORMANCE										
	TCAVBZ MODEL SEASONAL PERFORMANCE IN COOLING MODE		**2335**	**2365**	**2405**	**2465**	**2515**	**2565**	**2645**	**2705**	**2755**
①	Pdesignc (EN 14825)	kW	334,6	371,6	408,5	466,5	522,3	567,4	653,4	711,4	761,4
①	SEER (EN 14825)		4,68	4,63	4,6	4,67	4,62	4,58	4,66	4,62	4,61
②	$\eta_{s,c}$	%	184	182	181	184	182	180	183	182	181
	TCAVTZ MODEL SEASONAL PERFORMANCE IN COOLING MODE		**2345**	**2385**	**2425**	**2475**	**2525**	**2585**	**2655**	**2715**	**2765**
①	Pdesignc (EN 14825)	kW	344,6	384,6	429,6	480,5	534,4	585,4	667,4	722,4	775,3
①	SEER (EN 14825)		4,83	4,77	4,76	4,82	4,76	4,76	4,82	4,81	4,8
②	$\eta_{s,c}$	%	190	188	187	190	187	187	190	189	189
	TCAVQZ MODEL SEASONAL PERFORMANCE IN COOLING MODE		**2345**	**2385**	**2425**	**2475**	**2525**	**2585**	**2655**	**2715**	**2765**
①	Pdesignc (EN 14825)	kW	334,7	373,6	412,6	476,5	513,5	562,4	641,5	701,4	752,3
①	SEER (EN 14825)		4,78	4,68	4,65	4,75	4,71	4,66	4,73	4,72	4,69
②	$\eta_{s,c}$	%	188	184	183	187	186	183	186	186	185

① Low temperature application (7°C)
② Seasonal energy efficiency: low temperature cooling (EU Regulation 2016/2281)

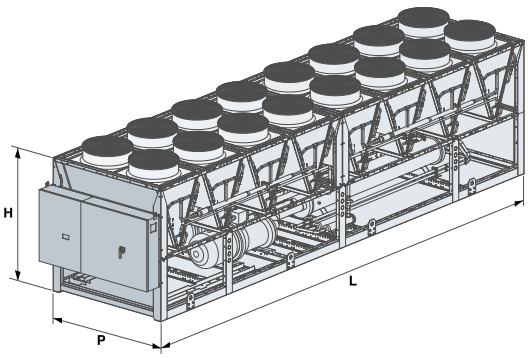

	TCAVBZ MODEL		2805	2865	2935	2995	21075	21115	21275	21405	21505
❶	Nominal cooling capacity	kW	803,4	869,3	948,3	999,2	1086,3	1126,2	1293,1	1406,1	1507,2
❶	E.E.R.		3,04	2,96	3,05	2,99	3,11	3	3,12	3,02	2,99
❶	Absorbed power	kW	264,3	293,7	310,9	334,2	349,3	375,4	414,5	465,6	504,1
	TCAVBZ MODEL		**2805**	**2865**	**2935**	**2995**	**21075**	**21115**	**21275**	**21405**	**21505**
❷	Sound pressure	dB(A)	67,5	68	68	68	69	69	69	70	71
❸	Sound power	dB(A)	100	101	101	101	102	102	102	103	104
	Screw compressors	n.					2				
	Circuits	n.	2	2	2	2	2	2	2	2	2
	Electrical supply	V-ph-Hz	400-3-50	400-3-50	400-3-50	400-3-50	400-3-50	400-3-50	400-3-50	400-3-50	400-3-50
	DIMENSIONS AND WEIGHTS		**2805**	**2865**	**2935**	**2995**	**21075**	**21115**	**21275**	**21405**	**21505**
	L - Width	mm	7150	7150	8250	8250	9350	9350	10450	11550	11550
	H - Height	mm	2480	2480	2480	2480	2480	2480	2480	2480	2480
	P - Depth	mm	2260	2260	2260	2260	2260	2260	2260	2260	2260
❹	TCAVBZ weight	kg	5400	5820	6210	6270	6780	6800	7180	8560	9010

	TCAVTZ-TCAVQZ MODEL		2815	2885	2955	21025	21105	21175	21335	21455	21565
❶	Nominal cooling capacity	kW	824,4	891,3	968,3	1034,3	1121,2	1181,2	1333,1	1450,2	1564,1
❶	Nominal cooling capacity	kW	791,4	851,3	930,4	1003,3	1077,3	1128,2	1287,1	1407,3	1502,2
❶	E.E.R.		3,34	3,3	3,37	3,31	3,34	3,26	3,27	3,19	3,16
❶	E.E.R.		3,09	3	3,09	3,03	3,07	2,96	2,98	3	2,92
❶	Absorbed power	kW	246,8	270,1	287,3	312,5	335,7	362,3	407,7	454,6	495
❶	Absorbed power	kW	256,1	283,8	301,1	331,1	350,9	381,1	431,9	469,1	514,5
	TCAVTZ-TCAVQZ MODEL		**2815**	**2885**	**2955**	**21025**	**21105**	**21175**	**21335**	**21455**	**21565**
❷	TCAVTZ Sound pressure	dB(A)	67	68	68	68	69	69	69	70	71
❷	TCAVQZ Sound pressure	dB(A)	59	60	60	60	60	61	61	62	63
❸	TCAVTZ Sound power	dB(A)	100	101	101	101	102	102	102	103	104
❸	TCAVQZ Sound power	dB(A)	92	93	93	93	93	94	94	95	96
	Screw compressors	n.					2				
	Circuits	n.	2	2	2	2	2	2	2	2	2
	Electrical supply	V-ph-Hz	400-3-50	400-3-50	400-3-50	400-3-50	400-3-50	400-3-50	400-3-50	400-3-50	400-3-50
	DIMENSIONS AND WEIGHTS		**2815**	**2885**	**2955**	**21025**	**21105**	**21175**	**21335**	**21455**	**21565**
	L - Width	mm	8250	8250	9350	9350	10450	10450	11550	12710	12710
	H - Height	mm	2480	2480	2480	2480	2480	2480	2480	2480	2480
	P - Depth	mm	2260	2260	2260	2260	2260	2260	2260	2260	2260
❹	TCAVTZ weight	kg	5705	6135	6680	6745	7130	7150	7555	9390	9850
❹	TCAVQZ weight	kg	6105	6535	7080	7145	7530	7550	7955	9810	10270

Data at the following conditions:

❶ Air: 35°C - Water: 12/7°C.

❷ In open field (Q = 2) at 10 m from the unit.

❸ Total sound power level in dB(A) based on measurements carried out in accordance with regulation UNI EN-ISO 9614.

❹ Weight referred to the unit without load and not accessorised.

☐ TCAVQZ super-silenced versions.

Performance according to EN 14511.

	SEASONAL ENERGY PERFORMANCE										
	TCAVBZ MODEL SEASONAL PERFORMANCE IN COOLING MODE		**2805**	**2865**	**2935**	**2995**	**21075**	**21115**	**21275**	**21405**	**21505**
①	Pdesignc (EN 14825)	kW	803,4	869,3	948,3	999,2	1086,3	1126,2	1293,1	1406,1	1507,2
①	SEER (EN 14825)		4,63	4,6	4,64	4,61	4,63	4,63	4,66	4,6	4,6
②	$\eta_{s,c}$	%	182	181	183	181	182	182	183	181	181
	TCAVTZ MODEL SEASONAL PERFORMANCE IN COOLING MODE		**2815**	**2885**	**2955**	**21025**	**21105**	**21175**	**21335**	**21455**	**21565**
①	Pdesignc (EN 14825)	kW	824,4	891,3	968,3	1034,3	1121,2	1181,2	1333,1	1450,2	1564,1
①	SEER (EN 14825)		4,78	4,74	4,77	4,77	4,82	4,75	4,78	4,79	4,76
②	$\eta_{s,c}$	%	188	187	188	188	190	187	188	189	188
	TCAVQZ MODEL SEASONAL PERFORMANCE IN COOLING MODE		**2815**	**2885**	**2955**	**21025**	**21105**	**21175**	**21335**	**21455**	**21565**
①	Pdesignc (EN 14825)	kW	791,4	851,3	930,4	1003,3	1077,3	1128,2	1287,1	1407,3	1502,2
①	SEER (EN 14825)		4,67	4,66	4,66	4,64	4,69	4,66	4,66	4,71	4,66
②	$\eta_{s,c}$	%	184	183	183	183	185	183	183	186	183

① Low temperature application (7°C)

② Seasonal energy efficiency: low temperature cooling (EU Regulation 2016/2281)

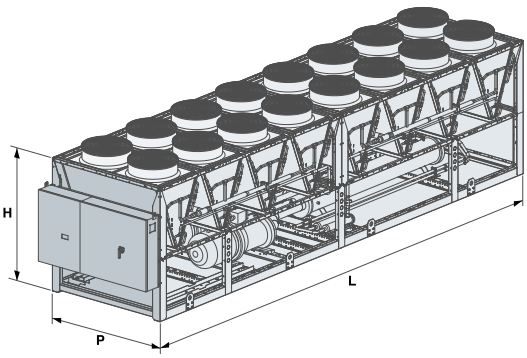

Z-Power FREECOOLING

TFAVBZ - TFAVIZ - TFAVSZ 2420÷21100

Cooling capacity:
469÷1.216 kW

TFAVBZ 2500
with FMB accessory

KEY FEATURES

- **High efficiency**
- **Standard electronic expansion valve**
- **Extended operation limits**

Air cooled water chillers in Freecooling mode with axial fans.
Range with semi-hermetic screw compressors and R134a refrigerant gas.

CONSTRUCTION FEATURES

- Compressor: high energy efficiency semi-hermetic screw compressor, with star-delta limited start and complete with integral protection, casing heater and refrigerant gas outlet piping shut-off valve.
- 2 circuits/ 6 capacity steps.
- Water side heat exchanger: counterflow dry expansion shell and tube type, complete with: differential pressure switch, air vent valve, water drain cock, closed cell polyurethane foam rubber insulation with protection film against UVA rays. Victaulic connections.
- Air side heat exchanger: consisting of coil made of copper pipes and aluminium fins divided into two sections: one dedicated to the condensation of the refrigerant gas and one dedicated to cooling the water in free-cooling mode.
- 3-way modulating valve to divert the water flow from the system towards the free-cooling coil or directly towards the evaporator.
- Fan: external rotor axial type electric fans, equipped with internal thermal protection, accident protection grilles and a proportional electronic device for pressurised and continuous fan rotation speed regulation up to an outdoor air temperature of -15°C.
- Control: electronic microprocessor control prepared for the connection with the main BMS available on the market (MODBUS RTU, LON, BacNet).
- Structure: load-bearing structure made of galvanised and painted steel plate with polyester powder coating. The unit is also complete with:
  - display of cooling circuit high and low pressure;
  - clock board

VERSIONS

- B - High efficiency standard version (TFAVBZ).
- I -Soundproofed version with soundproofing lining on the compressor compartment (TFAVIZ).
- S - Silenced version with soundproofing lining on the compressor compartment and reduced speed fans (TFAVSZ).

MODELS

- TFAVBZ: high efficiency base unit in Freecooling mode.
- TFAVIZ: soundproofed unit in Freecooling mode.
- TFAVSZ: silenced unit in Freecooling mode.

Features

COOL · SCREW COMPRESSOR · GAS R134a · OUTDOOR

FACTORY FITTED ACCESSORIES

- Condensing control -20°C with fans with EC motor.
- Power factor correction capacitors (cosϕ > 0.94).
- Compressor and fan circuit breaker switches.
- Forced limit of power consumption.
- Inlet compressor shut-off valves.
- Low and high pressure gauges for each cooling circuit.
- Bottom compartment protection nets.
- Coil protection nets.
- Coil protection metal filter.
- Compressors with linear capacity control (25-100 %).
- Evaporator antifreeze heater.
- Digital input for double set-point.
- Low water temperature.
- Double high pressure safety valve with exchange valve.
- Stainless steel cooling circuit.
- Electrical panel heater.
- Soft starter.
- Compressor oil level sensor.
- Control of min/max power supply voltage.
- 4-20 mA analogue signal for shifting set-point.
- Pre-painted copper/coils or copper/copper coils.
- Interfaces for serial communication with other devices.
- Spring anti-vibration mounts.

SEPARATELY SUPPLIED ACCESSORIES

- Remote keypad with display.
- Rhoss supervisors for unit monitoring and remote management.

Z-Power FREECOOLING

TFAVBZ - TFAVIZ - TFAVSZ 2420÷21100

	TFAVBZ - TFAVIZ - TFAVSZ MODEL		2420	2450	2500	2560	2660	2750
	FREE-COOLING OFF							
❶	Nominal cooling capacity	kW	481	512	574	636	756	825
❶	Nominal cooling capacity	kW	469	499	555	618	737	811
❶	E.E.R.		3,79	3,79	3,7	3,72	3,74	3,77
❶	E.E.R.		3,78	3,78	3,6	3,68	3,76	3,75
❶	Absorbed power	kW	127	135	155	171	202	219
❶	Absorbed power	kW	124	132	154	168	196	216
	FREE-COOLING ON 100%							
❷	Nominal cooling capacity	kW	481	512	574	636	756	825
❷	Nominal cooling capacity	kW	469	499	555	618	737	811
❷	E.E.R.		24,05	25,6	28,7	26,5	23,63	25,78
❷	E.E.R.		37,5	39,89	44,43	41,19	36,84	40,57
❷	Absorbed power	kW	20	20	20	24	32	32
❷	Absorbed power	kW	12,5	12,5	12,5	15	20	20
❷	Total Free-cooling Temperature	°C	2,4	1,8	1,1	1,8	2,3	1,9
❷	Total Free-cooling Temperature	°C	1,2	0,5	0	0,8	1,1	0,5
	TFAVBZ - TFAVSZ MODEL		**2420**	**2450**	**2500**	**2560**	**2660**	**2750**
❸	Sound pressure	dB(A)	65	65	65	66	68	68
❸	Sound pressure	dB(A)	60	60	60	60	62	62
❹	Sound power	dB(A)	98	98	98	99	101	101
❹	Sound power	dB(A)	92	92	92	93	95	95
	Screw compressors/steps	n.	2/6	2/6	2/6	2/6	2/6	2/6
	Circuits	n.	2	2	2	2	2	2
	Electrical supply	V-ph-Hz	400-3-50	400-3-50	400-3-50	400-3-50	400-3-50	400-3-50
	DIMENSIONS AND WEIGHTS		**2420**	**2450**	**2500**	**2560**	**2660**	**2750**
	L - Width	mm	6130	6130	6130	7160	10080	10080
	H - Height	mm	2580	2580	2580	2580	2580	2580
	P - Depth	mm	2260	2260	2260	2260	2260	2260
❺	TFAVBZ weight	kg	4850	5700	5780	6470	8180	8280
❺	TFAVIZ - TFAVSZ weight	kg	5090	6000	6080	6770	8560	8660

Data at the following conditions:
❶ Air: 30°C - Water: 15/10°C - Ethylene glycol 30%.
❷ Water: 15/10°C – Ethylene glycol 30%.
❸ In open field (Q = 2) at 10 m from the unit.
❹ Total sound power level in dB(A) based on measurements carried out in accordance with regulation UNI EN-ISO 9614.
❺ Weight referred to the unit without load and not accessorised.
☐ TFAVSZ silenced version.

	SEASONAL ENERGY PERFORMANCE		2420	2450	2500	2560	2660	2750
	TFAVBZ - TFAVIZ MODEL SEASONAL PERFORMANCE IN COOLING MODE							
⑤	PdesignR	kW	419,8	447,6	501,5	554,3	658,9	745,2
⑤	SEPR		5,59	5,59	5,57	5,57	5,6	5,61
	TFAVSZ MODEL SEASONAL PERFORMANCE IN COOLING MODE							
⑤	PdesignR	kW	408,8	435,9	484,8	538,7	641,9	731,1
⑤	SEPR		5,64	5,64	5,62	5,65	5,63	5,63

⑤ Application for high temperature (7°C) process chiller (EU Regulation 2016/2281)

	TFAVBZ - TFAVIZ - TFAVSZ MODEL		2800	2850	2920	2990	21050	21100
	FREE-COOLING OFF							
❶	Nominal cooling capacity	kW	885	944	1019	1093	1155	1216
❶	Nominal cooling capacity	kW	867	922	1000	1071	1129	1186
❶	E.E.R.		3,71	3,66	3,69	3,72	3,68	3,64
❶	E.E.R.		3,66	3,57	3,68	3,69	3,61	3,55
❶	Absorbed power	kW	238,5	258	276	294	314	334
❶	Absorbed power	kW	237	258	272	290	313	334
	FREE-COOLING ON 100%							
❷	Nominal cooling capacity	kW	885	944	1019	1093	1155	1216
❷	Nominal cooling capacity	kW	867	922	1000	1071	1129	1186
❷	E.E.R.		27,66	29,5	25,48	27,33	28,88	30,4
❷	E.E.R.		43,36	46,12	39,99	42,84	45,15	47,44
❷	Absorbed power	kW	32	32	40	40	40	40
❷	Absorbed power	kW	20	20	25	25	25	25
❷	Total Free-cooling Temperature	°C	1,2	0,6	1,1	1,6	1,1	0,5
❷	Total Free-cooling Temperature	°C	0	-0,7	0	0,3	-0,5	-1
	TFAVBZ - TFAVSZ MODEL		**2800**	**2850**	**2920**	**2990**	**21050**	**21100**
❸	Sound pressure	dB(A)	68	68	69	69	69	69
❸	Sound pressure	dB(A)	62	62	63	63	63	63
❹	Sound power	dB(A)	101	101	102	102	102	102
❹	Sound power	dB(A)	95	95	96	96	96	96
	Screw compressors/steps	n.	2/6	2/6	2/6	2/6	2/6	2/6
	Circuits	n.	2	2	2	2	2	2
	Electrical supply	V-ph-Hz	400-3-50	400-3-50	400-3-50	400-3-50	400-3-50	400-3-50
	DIMENSIONS AND WEIGHTS		**2800**	**2850**	**2920**	**2990**	**21050**	**21100**
	L - Width	mm	10080	10080	12080	12080	12080	12080
	H - Height	mm	2580	2580	2580	2580	2580	2580
	P - Depth	mm	2260	2260	2260	2260	2260	2260
❺	TFAVBZ weight	kg	8740	9155	10245	10255	10580	10640
❺	TFAVIZ - TFAVSZ weight	kg	9120	9535	10625	10635	10960	11020

Data at the following conditions:
❶ Air: 30°C - Water: 15/10°C - Ethylene glycol 30%.
❷ Water: 15/10°C – Ethylene glycol 30%.
❸ In open field (Q = 2) at 10 m from the unit.
❹ Total sound power level in dB(A) based on measurements carried out in accordance with regulation UNI EN-ISO 9614.
❺ Weight referred to the unit without load and not accessorised.
☐ TFAVSZ silenced version.

	SEASONAL ENERGY PERFORMANCE		2800	2850	2920	2990	21050	21100
	TFAVBZ - TFAVIZ MODEL SEASONAL PERFORMANCE IN COOLING MODE							
⑤	PdesignR	kW	796,8	847	917,5	983,2	1038,8	1092,7
⑤	SEPR		5,56	5,54	5,6	5,61	5,61	5,58
	TFAVSZ MODEL SEASONAL PERFORMANCE IN COOLING MODE							
⑤	PdesignR	kW	779	825,5	898,2	961,1	1013,1	1063,4
⑤	SEPR		5,61	5,6	5,65	5,63	5,68	5,6

⑤ Application for high temperature (7°C) process chiller (EU Regulation 2016/2281)

TurboPOWER ECO

TCATTE-TCATQE 1330÷3950

Cooling capacity:
323,2÷948,6 kW

TCATTE 3950 with FIAP accessory

KEY FEATURES

- **High energy efficiency chillers**
- **Efficient, quiet and low start-up current oil-free compressor**
- **HFO R1234ze ecological gas**
- **Integrated MASTER/SLAVE control**

Air cooled water chillers with axial fans. Range with oil-free centrifugal compressors and R1234ze refrigerant gas.

CONSTRUCTION FEATURES

- Compressor: high energy efficiency, oil free, centrifugal compressor with limited start, equipped with magnetic levitation bearings and complete with integral protection and intake and delivery shut-off valves. The compressor was specifically designed for R1234ze gas with zero environmental impact.
- Water side heat exchanger: spray flooded type shell and tube exchanger, complete with closed cell polyurethane foam rubber insulation, water flow differential pressure switch and Victaulic fittings.
- Air side heat exchanger: with micro-channels.
- Fan: external rotor helical type EC motor electric fans with internal thermal protection and accident protection grilles.
- Control: microprocessor electronic control.
- Structure: made of galvanised and painted steel plate with polyester powder coating.
- The unit is also complete with:
  - display of cooling circuit high/low pressure;
  - electronic expansion valve;
  - double safety valve;
  - leak detector;
  - clock board;
  - Master/Slave control up to 4 units in parallel;
  - control of Variable Primary Flow (VPF_R).

VERSIONS

- T - High-efficiency version, soundproofed technical compressor compartment (TCATTE).
- Q - Super silenced version, super-soundproofed technical compartment, reduced speed fans (TCATQE).

MODELS

- TCATTE: high efficiency unit designed for cooling only.
- TCATQE: super silenced unit designed for cooling only.

FACTORY FITTED ACCESSORIES

- PUMP with single or double electric pump, one of which automatic in standby. The electric pumps are available in the low or high head versions.
- Inverter pump control for unit start-up.
- Condensing control with over-pressure fans.
- Power factor correction capacitors (cosϕ > 0.94).
- Compressor circuit breaker switches.
- Electro-mechanical flow switch.
- Forced limit of power consumption.
- Forced noise limit.
- Energy parameter measuring device.
- Soundproofed compressor box.
- Cooling circuit high and low pressure gauges.
- Coil protection nets.
- Micro-channel coils with E-coating treatment.
- Control of min/max power supply voltage.
- Digital input for double set-point.
- 4-20 mA analogue signal for shifting set-point.
- Evaporator antifreeze heater, electrical panel, electric pumps, if applicable.
- Interfaces for serial communication with other devices.
- Anti-vibration mounts.

SEPARATELY SUPPLIED ACCESSORIES

- Remote keypad with display.
- Rhoss supervisors for unit monitoring and remote management.
- Rhoss sequencer for integrated management of multiple chillers.

Features

COOL · CENTRIFUGAL COMPRESSOR · LOW GWP · GAS R1234 ze · OUTDOOR · EUROVENT CERTIFIED PERFORMANCE www.eurovent-certification.com

	TCATTE-TCATQE MODEL		1330	2400	2470	2550	2660	3790	3950
❶	Nominal cooling capacity	kW	334,2	399,1	470	548,9	660,5	792,1	948,6
❶	Nominal cooling capacity	kW	323,2	386,1	450,1	536,9	639,7	767,3	916,9
❶	E.E.R.		3,45	3,44	3,5	3,45	3,4	3,49	3,46
❶	E.E.R.		3,45	3,39	3,46	3,37	3,38	3,45	3,43
❶	Absorbed power	kW	96,9	116	134,3	159,1	194,3	227	274,2
❶	Absorbed power	kW	93,7	113,9	130,1	159,3	189,3	222,4	267,3
	TCATTE-TCATQE MODEL		**1330**	**2400**	**2470**	**2550**	**2660**	**3790**	**3950**
❸	TCATTE sound pressure	dB(A)	62	62,5	62,5	63	64	64	65
❸	TCATQE sound pressure	dB(A)	56	56,5	57	58	58	59	60
❹	TCATTE sound power	dB(A)	94	95	95	96	97	97	98
❹	TCATQE sound power	dB(A)	88	89	90	91	91	92	93
	Compressors	n.	1	2	2	2	2	3	3
	Circuits	n.	1	1	1	1	1	2	2
	Electrical supply	V-ph-Hz	400-3-50	400-3-50	400-3-50	400-3-50	400-3-50	400-3-50	400-3-50
	DIMENSIONS AND WEIGHTS		**1330**	**2400**	**2470**	**2550**	**2660**	**3790**	**3950**
	L - Width	mm	4940	6090	7250	8350	9450	11650	12810
	H - Height	mm	2450	2450	2450	2450	2450	2450	2450
	P - Depth	mm	2260	2260	2260	2260	2260	2260	2260
❺	TCATTE weight	kg	2770	3410	3960	4270	4880	6280	6840
❺	TCATQE weight	kg	2790	3440	3990	4300	4910	6310	6880

Data at the following conditions:
❶ Air: 35°C - Water: 12/7°C
❸ In open field (Q = 2) at 10 m from the unit.
❹ Total sound power level in dB(A) based on measurements carried out in accordance with regulation UNI EN-ISO 9614.
❺ Weight referred to the unit without load and not accessorised.
TCATQE super silenced versions
Performance according to EN 14511.

	SEASONAL ENERGY PERFORMANCE		1330	2400	2470	2550	2660	3790	3950
	TCATTE MODEL SEASONAL PERFORMANCE IN COOLING MODE								
①	Pdesignc (EN 14825)	kW	334,2	399,1	470	548,9	660,5	792	948,6
①	SEER (EN 14825)		5,73	5,77	5,77	5,82	5,83	6,01	6
②	$\eta_{s,c}$	%	226	228	228	230	230	238	237
	TCATQE MODEL SEASONAL PERFORMANCE IN COOLING MODE								
①	Pdesignc (EN 14825)	kW	323,2	386,1	450,1	536,9	639,7	767,2	916,8
①	SEER (EN 14825)		5,74	5,79	5,84	5,83	5,88	6,06	5,98
②	$\eta_{s,c}$	%	226	229	231	230	232	239	236

① Low temperature application (7°C)
② Seasonal energy efficiency: low temperature cooling (EU Regulation 2016/2281)

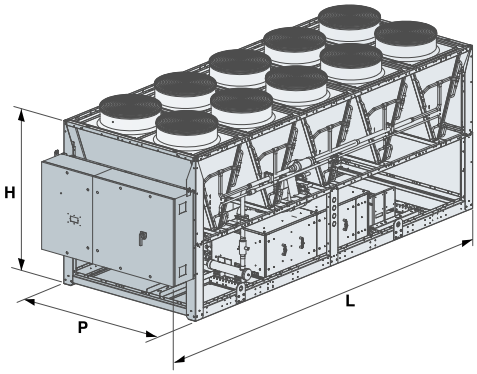

TurboPOWER

TCATBZ-TCATTZ 1300÷31100 / TCATQZ 1300÷3990

Cooling capacity:
267,0÷1101 kW

TCATTZ 31100 with FIAP accessory

KEY FEATURES

- **Efficient, quiet and low start-up current oil-free compressor**
- **High energy efficiency chillers.**
- **Wide range of accessories**
- **Integrated MASTER/SLAVE control**

Air cooled water chillers with axial fans. Range with oil-free centrifugal compressors and R134a refrigerant gas.

CONSTRUCTION FEATURES

- Compressor: high energy efficiency, oil free, centrifugal compressor with limited start, equipped with magnetic levitation bearings and complete with integral protection and intake and delivery shut-off valves.
- Water side heat exchanger: flooded type shell and tube, complete with closed cell polyurethane foam rubber insulation, water flow differential pressure switch and Victaulic fittings.
- Air side heat exchanger: with micro-channels.
- Fan: external rotor axial type electric fans with internal thermal protection, accident protection grilles. Version B is equipped with a proportional electronic device for continuous fan rotation speed regulation, while versions T-Q are equipped with EC motor fans.
- Control: microprocessor electronic control.
- Structure: made of galvanised and painted steel plate with polyester powder coating.
- The unit is also complete with:
  - display of cooling circuit high/low pressure;
  - electronic expansion valve;
  - double safety valve;
  - clock board;
  - Master/Slave control up to 4 units in parallel;
  - control of Variable Primary Flow (VPF_R).

VERSIONS

- B - Basic version, soundproofed technical compressor compartment (TCATBZ).
- T - High-efficiency version, soundproofed technical compressor compartment (TCATTZ).
- Q - Super silenced version, super-soundproofed technical compartment, reduced speed fans (TCATQZ).

MODELS

- TCATBZ: standard unit designed for cooling only.
- TCATTZ: high efficiency unit designed for cooling only.
- TCATQZ: super silenced unit designed for cooling only.

FACTORY FITTED ACCESSORIES

- PUMP with single or double electric pump, one of which automatic in standby. The electric pumps are available in the low or high head versions.
- Inverter pump control for unit start-up.
- Condensing control with fans with EC motor (standard in T-Q versions).
- Condensing control with over-pressure fans.
- Power factor correction capacitors (cosϕ > 0.94).
- Compressor circuit breaker switches.
- Electro-mechanical flow switch.
- Forced limit of power consumption.
- Forced noise limit.
- Energy parameter measuring device.
- Soundproofed compressor box.
- Refrigerant leak detector.
- Cooling circuit high and low pressure gauges.
- Coil protection nets.
- Micro-channel coils with E-coating treatment.
- Control of min/max power supply voltage.
- Digital input for double set-point.
- 4-20 mA analogue signal for shifting set-point.
- Evaporator antifreeze heater, electrical panel, electric pumps, if applicable.
- Interfaces for serial communication with other devices.
- Anti-vibration mounts.

SEPARATELY SUPPLIED ACCESSORIES

- Remote keypad with display.
- Rhoss supervisors for unit monitoring and remote management.
- Rhoss sequencer for integrated management of multiple chillers.

Features

COOL · CENTRIFUGAL COMPRESSOR · GAS R134a · OUTDOOR · EUROVENT CERTIFIED PERFORMANCE www.eurovent-certification.com

	TCATBZ-TCATTZ-TCATQZ MODEL		1300	1400	2500	2590	2680	2760	2820	2880	3990	31100
❶	TCATBZ nominal cooling capacity	kW	284,9	376,6	489,2	577,8	675,1	749,2	808,9	874,4	982,2	1089,1
❶	TCATTZ nominal cooling capacity	kW	298,8	402,3	498,1	593,6	685	760	820,8	882,3	993,1	1101
❶	TCATQZ nominal cooling capacity	kW	267,1	369,7	463,4	541,2	639,5	721,5	792,1	871,6	970,4	-
❶	E.E.R. TCATBZ		3,2	3,18	3,26	3,22	3,2	3,2	3,22	3,14	3,25	3,22
❶	E.E.R. TCATTZ		3,46	3,42	3,46	3,48	3,37	3,52	3,5	3,33	3,47	3,45
❶	E.E.R. TCATQZ		3,22	3,32	3,25	3,28	3,21	3,24	3,36	3,31	3,27	-
❶	TCATBZ absorbed power	kW	89	118,4	150,1	179,4	211	234,1	251,2	278,5	302,2	338,2
❶	TCATTZ absorbed power	kW	86,4	117,6	144	170,6	203,3	215,9	234,5	265	286,2	319,1
❶	TCATQZ absorbed power	kW	83	111,4	142,6	165	199,2	222,7	235,7	263,3	296,8	-
	TCATBZ-TCATTZ-TCATQZ MODEL		**1300**	**1400**	**2500**	**2590**	**2680**	**2760**	**2820**	**2880**	**3990**	**31100**
❷	TCATBZ sound pressure	dB(A)	60	62	62,5	62,5	63	64	64	64	64	65
❷	TCATTZ sound pressure	dB(A)	60	62	62,5	62,5	63	64	64	64	64	65
❷	TCATQZ sound pressure	dB(A)	55	56	56,5	57	58	58	58	59	59	-
❸	TCATBZ sound power	dB(A)	92	94	95	95	96	97	97	97	97	98
❸	TCATTZ sound power	dB(A)	92	94	95	95	96	97	97	97	97	98
❸	TCATQZ sound power	dB(A)	87	88	89	90	91	91	91	92	92	-
	Compressor	n.	1	1	2	2	2	2	2	2	3	3
	Circuits	n.	1	1	1	1	1	1	1	1	2	2
	Electrical supply	V-ph-Hz	400-3-50	400-3-50	400-3-50	400-3-50	400-3-50	400-3-50	400-3-50	400-3-50	400-3-50	400-3-50
	DIMENSIONS AND WEIGHT		**1300**	**1400**	**2500**	**2590**	**2680**	**2760**	**2820**	**2880**	**3990**	**31100**
	W - Width of version B	mm	3840	4940	6090	7250	8350	9450	9450	10550	11650	12810
	W - Width of version T	mm	3840	4940	6090	7250	8350	9450	10550	11650	11650	12810
	W - Width of version Q	mm	3840	4940	6090	7250	8350	9450	10550	11650	12810	-
	H - Height	mm	2450	2450	2450	2450	2450	2450	2450	2450	2450	2450
	P - Depth	mm	2260	2260	2260	2260	2260	2260	2260	2260	2260	2260
❹	TCATBZ weight	kg	2390	2740	3490	3950	4350	4800	4910	5210	6040	6560
❹	TCATTZ weight	kg	2410	2760	3470	3980	4320	4840	5140	5440	6000	6520
❹	TCATQZ weight	kg	2390	2730	3500	3960	4350	4800	5160	5460	6500	-

Data at the following conditions:

❶ Air: 35°C - Water: 12/7°C

❷ In open field (Q = 2) at 10 m from the unit.

❸ Total sound power level in dB(A) based on measurements carried out in accordance with regulation UNI EN-ISO 9614.

❹ Weight referred to the unit without load and not accessorised.

TCATQZ super silenced versions

Performance according to EN 14511.

	SEASONAL ENERGY PERFORMANCE		1300	1400	2500	2590	2680	2760	2820	2880	3990	31100
	TCATBZ MODEL SEASONAL PERFORMANCE IN COOLING MODE											
①	Pdesignc (EN 14825)	kW	284,9	376,6	489,2	577,8	675,1	749,2	808,8	874,4	982,1	1088,9
①	SEER (EN 14825)		5,3	5,18	5,34	5,26	5,35	5,21	5,26	5,21	5,35	5,31
②	$\eta_{s,c}$	%	209	204	211	207	211	205	207	205	211	210
	TCATTZ MODEL SEASONAL PERFORMANCE IN COOLING MODE											
①	Pdesignc (EN 14825)	kW	298,8	402,3	498,1	593,6	685	760,1	820,8	882,3	993,1	1100,9
①	SEER (EN 14825)		5,63	5,75	5,85	5,83	5,91	6,03	5,97	5,94	5,99	5,94
②	$\eta_{s,c}$	%	222	227	231	230	234	238	236	235	237	234
	TCATQZ MODEL SEASONAL PERFORMANCE IN COOLING MODE											
①	Pdesignc (EN 14825)	kW	267,1	369,7	463,4	541,2	639,5	721,5	792,1	871,6	970,3	-
①	SEER (EN 14825)		5,65	5,76	5,88	5,81	5,9	5,96	5,98	5,98	6,02	-
②	$\eta_{s,c}$	%	223	227	232	230	233	235	236	236	238	-

① Low temperature application (7°C)

② Seasonal energy efficiency: low temperature cooling (EU Regulation 2016/2281)

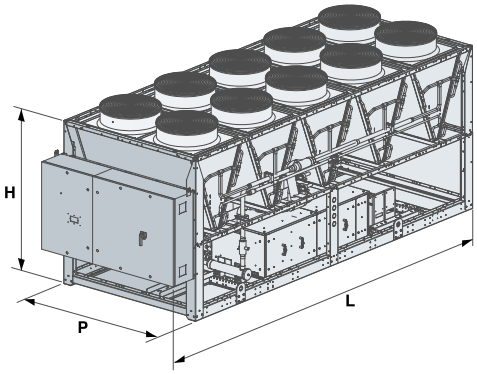

Compact-ID

TCCITY-THCITY 117÷128

Cooling capacity:
16,4÷27,5 kW

Heating capacity:
17,7÷28,5 kW

KEY FEATURES

- **PLUG-FANS with low consumption EC motor**
- **Vertically or horizontally ducted delivery.**
- **Hot water up to –15°C outdoor air**
- **Temperature of the produced water up to 60°C**
- **Integrated MASTER/SLAVE control**
- **Inertial buffer tank**

Packaged air-cooled water chillers and reversible heat pumps with Plug-Fans with EC motor. Range with scroll hermetic compressors, DC Inverter and R410A refrigerant gas.

CONSTRUCTION FEATURES

- Compressor: scroll type, rotary, hermetic with Inverter actuation, complete with thermal protection and casing heater.
- Water side heat exchanger: adequately insulated stainless steel plates, complete with antifreeze heater and water flow differential pressure switch.
- Air side heat exchanger: featuring a finned coil with copper pipes and aluminium fins for TCCITY and with hydrophilic treatment for THCITY, complete with protection grilles.
- Fan: Plenum electric fan with directly coupled, low consumption EC motor fitted with internal thermal protection and accident protection grilles. Removable fan unit section for on-site positioning.
- Vertical condensing air delivery, horizontal outlet easily transformed on-site.
- Proportional electronic device for the continuous regulation of the fan rotation speed up to a temperature of outdoor air of -10°C when running as a chiller.
- Control: microprocessor electronic control with Adaptive Function Plus logic.
- Structure: made of galvanised and painted steel plate, complete with condensate drain pan and unit base antifreeze heater for THCITY.
- The unit is also complete with:
  - outdoor air temperature probe for set-point compensation;
  - electronic expansion valve;
  - display of cooling circuit high and low pressure;
  - Master/Slave control up to 4 units in parallel;
  - clock board.

VERSION

T - High efficiency.

MODELS

TCCITY: unit designed for cooling only.
THCITY: heat pump unit.

PUMP SET-UP

- Pump unit complete with: EC circulator with 3 speed selector or continuous speed regulation or electric pump, membrane expansion tank, manual air vent valve, safety valve and pressure gauge.

TANK&PUMP SET UP

- Pump unit complete with: inertial buffer tank, circulator or electric circulation pump, membrane expansion tank, manual air vent valve, safety valve, and pressure gauge.

FACTORY FITTED ACCESSORIES

- Forced Download. Compressor partialisation or switch-off to limit power and current consumption (digital input).
- Antifreeze heater on the tank.
- Circulator/electric pump antifreeze heater.
- Pre-painted copper/coils or copper/copper coils.
- Digital input for double set-point.
- 4-20 mA analogue signal for shifting set-point.
- Low water set-point temperature.

ACCESSORIES SUPPLIED LOOSE

- 3-way valve for the production of domestic hot water, managed by regulation.
- Additional electrical resistance for heat pump, managed by regulation.
- Remotable outdoor air temperature probe for compensation of the set-point.
- Delivery anti-vibration fitting.
- Suction duct fitting.
- Water filter.
- Rubber anti-vibration mounts.
- Remote keypad with display.
- Interfaces for serial communication with other devices.
- RS485/USB serial converter.
- Rhoss supervisors for unit monitoring and remote management.

Features

COOL · COOL HEAT · SCROLL COMPRESSOR · INVERTER · GAS R410A · INDOOR · ADAPTIVE FUNCTION PLUS · EUROVENT CERTIFIED PERFORMANCE www.eurovent-certification.com

	TCCITY MODEL		117	124	128
❶	Cooling capacity	kW	16,4	24,3	27,5
❶	NOM absorbed power	kW	5,24	8,15	9,01
❶	E.E.R.		3,13	2,98	3,05
	THCITY MODEL		**117**	**124**	**128**
❷	Heating capacity	kW	17,7	24,3	28,5
❷	NOM absorbed power	kW	5,33	7,48	8,88
❷	C.O.P.		3,32	3,25	3,21
❸	Heating capacity	kW	18,8	25	29,1
❸	NOM absorbed power	kW	4,59	6,1	7,28
❸	C.O.P.		4,1	4,1	4
❹	Heating capacity	kW	12,3	18,1	22,9
❹	NOM absorbed power	kW	4,14	6,65	7,46
❹	C.O.P.		2,97	2,72	3,07
❶	MIN/NOM/MAX cooling capacity		16,2	23,8	27
❶	E.E.R.		2,98	2,84	2,91
	TCCITY - THCITY MODEL		**117**	**124**	**128**
❺	Fan delivery sound pressure	dB(A)	53	53	56
❺	Machine body sound pressure	dB(A)	42	42	45
	Fan nominal air flow	m^3/h	7600	7600	8640
	Fan available static pressure	Pa	80	80	80
❶	P0 circulator available head	kPa	89	89	76
	Buffer tank water content	l	110	110	110
	Electrical supply	V-ph-Hz	400-3+N-50	400-3+N-50	400-3+N-50
	DIMENSIONS AND WEIGHT		**117**	**124**	**128**
	L - PUMP width	mm	1522	1522	1522
	L - TANK&PUMP width	mm	1625	1625	1625
	H - PUMP height	mm	1280	1280	1280
	H - TANK&PUMP height	mm	1590	1590	1590
	P - PUMP Depth	mm	815	815	815
	P - TANK&PUMP Depth	mm	815	815	815
❻	PUMP Weight	kg	265	285	295
❻	TANK&PUMP Weight	kg	365	385	395

Data at the following conditions:
❶ Air: 35°C D.B. - Water: 12/7°C.
❷ Air: 7°C D.B. - 6°C W.B. - Water: 40/45°C.
❸ Air: 7°C D.B. - 6°C W.B. - Water: 30/35°C.
❹ Air: -7°C D.B. - Water: 30/35°C.
❺ In open field (Q = 2) at 5 m from the unit and ducted fan.
❻ Weight refers to the most complete setup.
Performance according to EN 14511. P0/PI0 setup.

	SEASONAL ENERGY PERFORMANCE		117	124	128
	TCCITY MODEL SEASONAL PERFORMANCE IN COOLING MODE				
①	Pdesignc (EN 14825)	kW	16,4	24,3	27,5
①	SEER (EN 14825)		4,54	4,52	4,59
②	$\eta_{s,c}$	%	179	178	181
	THCITY MODEL SEASONAL PERFORMANCE IN HEATING MODE - Low temperature application 35°C				
③	Pdesignh (EN 14825)	kW	19	28	35
③	SCOP (EN 14825)		4,14	3,53	3,69
④	η_s	%	162	138	145
④	Energy class		A++	A+	A+
	THCITY MODEL SEASONAL PERFORMANCE IN HEATING MODE - Medium temperature application 55°C				
③	Pdesignh (EN 14825)	kW	16	-	-
③	SCOP (EN 14825)		3,08	-	-
④	η_s	%	120		
④	Energy class		A+		

① Low temperature application (7°C)

② Seasonal energy efficiency: low temperature cooling (EU Regulation 2016/2281)

③ In Average climatic conditions.

④ Seasonal energy efficiency: ambient heating in Average climate (EU Regulations No.811/2013 and No.813/2013)

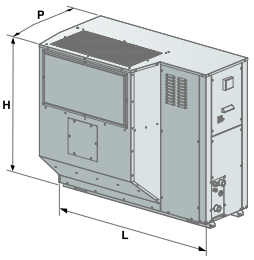

PUMP

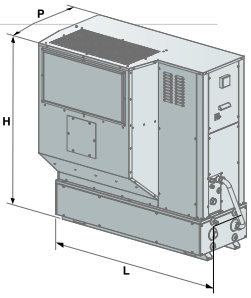

TANK&PUMP

Y-Pack C-PF

TCCETY-THCETY 233÷2160

Cooling capacity:
32,3÷160,2 kW

Heating capacity:
37,7÷175,6 kW

TCCETY 2130

THCETY 270

KEY FEATURES

- **High energy efficiency range**
- **"Plug-Fan" type centrifugal fans with EC motor (brushless)**
- **Multi-purpose for systems with 2 pipes + DHW (with optional RC100)**
- **Integrated MASTER/SLAVE control**

High efficiency air cooled water chillers and packaged reversible heat pumps with plug-fan type centrifugal fans with EC motors. Range with scroll hermetic compressors and R410A refrigerant.

CONSTRUCTION FEATURES

- Compressor: scroll type, rotary, hermetic complete with thermal protection and casing heater.
- 2 or 3 capacity steps depending on the models, to obtain excellent load modulation along with high energy efficiency at partial loads.

Water side heat exchanger: with stainless steel plates, complete with closed cell polyurethane foam rubber insulation and water flow differential pressure switch.

- Air side heat exchanger: featuring finned coil with copper pipes and aluminium fins.
- Plug-Fan type centrifugal electric fans with EC motors, equipped with internal thermal protection arranged in single row with horizontal outlet.
  Horizontal outlet of the evaporation condensing air opposite side to finned coil or vertical outlet can be easily transformed on site.
- Proportional electronic device for continuous fan rotation speed regulation up to an outdoor air temperature of –15°C in chiller mode and up to an outdoor air temperature of 40°C in heat pump mode.
- Control: microprocessor electronic control with Adaptive Function Plus logic.
- Load-bearing structure and panelling made of painted and galvanised sheet steel (RAL 9018); galvanised sheet steel base
- The unit is also complete with:
  - fan and compressor circuit breaker switches;
  - display of cooling circuit high and low pressure;
  - Master/Slave control up to 4 units in parallel;
  - clock board;
  - control of Variable Primary Flow (VPF_R).

VERSIONS

- T - High efficiency version (TCCETY-THCETY).

MODELS

- TCCETY: unit for cooling only.
- THCETY: reversible heat pump unit.

FACTORY FITTED ACCESSORIES

- PUMP with single or double electric pump, including an automatic actuation pump in standby, complete with expansion tank, safety valve and water side pressure gauge. The electric pumps are available in the low or high head versions.
- TANK&PUMP with integrated buffer tank and single or double electric pump, complete with expansion tank, air vent valves, safety valve and water side pressure gauge.
- Inverter pump control for unit start-up.
- Desuperheater.
- 100% heat recovery unit.
- Low temperature water production.
- Electronic expansion valve.
- Power factor correction capacitors (cosϕ > 0.94).
- Forced limit of power consumption.
- Energy parameter measuring device.
- Optimised energy efficiency.
- Soft starter.
- Compressor soundproofing.
- Cooling circuit outlet and inlet valves.
- Refrigerant leak detector.
- Cooling circuit high and low pressure gauges.
- Double safety valves.
- Copper/copper or copper/pre-painted aluminium coils.
- Control of min/max power supply voltage.
- Digital input for double set-point.
- 4-20 mA analogue signal for shifting set-point.
- Evaporator antifreeze heater, buffer tank, pumps and heat exchangers for heat recovery if applicable.

Features

• Interfaces for serial communication with other devices.
• Anti-vibration mounts.

SEPARATELY SUPPLIED ACCESSORIES

• Remote keypad with display.
• Thermostat with display.
• Rhoss supervisors for unit monitoring and remote management.
• Rhoss sequencer for integrated management of multiple chillers.

Y-Pack C-PF

TCCETY-THCETY 233÷2160

	TCCETY MODEL		233	238	245	250	260	265	270
❶	Nominal cooling capacity	kW	32,3	38,5	43,9	51	58,9	63,7	69,9
❶	E.E.R.		2,61	2,77	2,7	2,73	2,67	2,6	2,83
❶	Absorbed power	kW	12,38	13,9	16,26	18,55	21,98	24,5	24,53
	THCETY MODEL		**233**	**238**	**245**	**250**	**260**	**265**	**270**
❷	Nominal heating capacity	kW	37,7	42,1	48,1	56,2	62,5	68,3	79,4
❷	C.O.P.		3	3	3,01	2,96	2,97	2,86	3,23
❷	Absorbed power in winter mode	kW	12,57	14,03	15,98	18,8	20,9	23,72	24,36
❶	Nominal cooling capacity	kW	32,3	38,5	42,3	50,3	57,8	61,6	69,1
❸	Sound power	dB(A)	82	82	83	85	85	85	85
	Scroll compressors/steps	no.	2/2	2/2	2/3	2/3	2/3	2/3	2/3
	Circuits	no.	1	1	1	1	1	1	1
	Fan nominal air flow	m³/h	13000	13000	13000	26000	26000	26000	26000
	Fan maximum available static pressure	Pa	250	250	250	250	250	250	250
	Electrical supply	V-ph-Hz	400-3+N-50	400-3+N-50	400-3+N-50	400-3+N-50	400-3+N-50	400-3+N-50	400-3+N-50
	DIMENSIONS		**233**	**238**	**245**	**250**	**260**	**265**	**270**
	L - Width	mm	2650	2650	2650	2650	2650	2650	3650
	H - Height	mm	1920	1920	1920	1920	1920	1920	1920
	P - Depth	mm	870	870	870	870	870	870	1100
❹	TCCETY weight	kg	820	820	850	885	890	890	1120
❹	THCETY weight	kg	840	840	875	910	910	910	1175

Data at the following conditions:
❶ Air: 35°C - Water: 12/7°C and ESP: 250 Pa.
❷ Air: 7°C D.B. - 6°C W.B. - Water: 40/45°C and ESP: 250 Pa.
❸ Total sound power level in dB(A) based on measurements carried out in accordance with regulation UNI EN-ISO 9614.
❹ Weight referred to the unit without load and not accessorised.
Performance according to EN 14511.

	SEASONAL ENERGY PERFORMANCE		233	238	245	250	260	265	270
	TCCETY MODEL SEASONAL PERFORMANCE IN COOLING MODE								
①	Pdesignc (EN 14825)	kW	32,3	38,5	43,9	51	58,9	63,7	69,9
①	SEER (EN 14825)		4,54	4,54	4,56	4,51	4,53	4,57	4,59
②	$\eta_{s,c}$	%	179	178	179	177	178	180	181
	THCETY MODEL SEASONAL PERFORMANCE IN HEATING MODE								
③	Pdesignh (EN 14825)	kW	31	35	41	48	52	59	66
③	SCOP (EN 14825)		3,52	3,27	3,86	3,52	3,46	3,57	3,71
④	η_s	%	138	128	152	138	136	140	145
④	Energy class		A+	A+	A++	A+	A+	A+	A+

① Low temperature application (7°C)
② Seasonal energy efficiency: low temperature cooling (EU Regulation 2016/2281)
③ In Average climatic conditions, low temperature application (35°C)
④ Seasonal energy efficiency: low temperature heating in Average climate (EU Regulations No.811/2013 and No.813/2013)

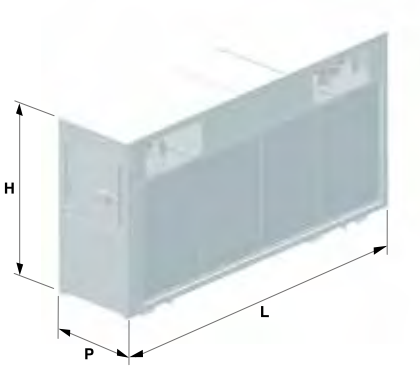

	TCCETY MODEL		280	290	2100	2115	2130	2145	2160
❶	Nominal cooling capacity	kW	79,1	87,5	100,6	113,9	125,3	142,3	160,2
❶	E.E.R.		2,89	2,81	2,71	2,9	2,87	2,86	2,86
❶	Absorbed power	kW	27.37	31,03	36,72	38,28	43,66	49,07	55,43
	THCETY MODEL		**280**	**290**	**2100**	**2115**	**2130**	**2145**	**2160**
❷	Nominal heating capacity	kW	86,3	96,4	111,5	122,5	139,6	157,6	175,6
❷	C.O.P.		3,36	3,18	3,16	3,21	3,3	3,21	3,2
❷	Absorbed power in winter mode	kW	25,53	30,31	34,95	37,69	42,3	48,49	54,2
❶	Nominal cooling capacity	kW	77,4	84,9	98,9	110,6	123,4	140,8	159,3
❸	Sound power	dB(A)	85	86	88	88	88	89	89
	Scroll compressors/steps	no.	2/2	2/3	2/3	2/3	2/2	2/3	2/2
	Circuits	no.	1	1	1	1	1	1	1
	Fan nominal air flow	m³/h	26000	27000	39000	39000	39000	52000	52000
	Fan maximum available static pressure	Pa	250	250	250	250	250	250	250
	Electrical supply	V-ph-Hz	400-3+N-50	400-3+N-50	400-3+N-50	400-3+N-50	400-3+N-50	400-3+N-50	400-3+N-50
	DIMENSIONS		**280**	**290**	**2100**	**2115**	**2130**	**2145**	**2160**
	L - Width	mm	3650	3650	3650	4450	4450	4450	4450
	H - Height	mm	1920	1920	1920	2320	2320	2320	2320
	P - Depth	mm	1100	1100	1100	1100	1100	1100	1100
❹	TCCETY weight	kg	1290	1330	1395	1610	1665	1740	1750
❹	THCETY weight	kg	1350	1390	1460	1680	1745	1825	1825

Data at the following conditions:
❶ Air: 35°C - Water: 12/7°C and ESP: 250 Pa.
❷ Air: 7°C D.B. - 6°C W.B. - Water: 40/45°C and ESP: 250 Pa.
❸ Total sound power level in dB(A) based on measurements carried out in accordance with regulation UNI EN-ISO 9614.
❹ Weight referred to the unit without load and not accessorised.
Performance according to EN 14511.

	SEASONAL ENERGY PERFORMANCE		280	290	2100	2115	2130	2145	2160
	TCCETY MODEL SEASONAL PERFORMANCE IN COOLING MODE								
①	Pdesignc (EN 14825)	kW	79,1	87,5	100,6	113,9	125,3	142,3	160,2
①	SEER (EN 14825)		4,53	4,54	4,54	4,58	4,48	4,56	4,47
②	$\eta_{s,c}$	%	178	179	179	180	176	179	176
	THCETY MODEL SEASONAL PERFORMANCE IN HEATING MODE								
③	Pdesignh (EN 14825)	kW	71	80	93	102	117	132	147
③	SCOP (EN 14825)		4,12	3,66	3,58	3,67	4,05	3,63	3,93
④	η_s	%	162	143	140	144	159	142	154

① Low temperature application (7°C)
② Seasonal energy efficiency: low temperature cooling (EU Regulation 2016/2281)
③ In Average climatic conditions, low temperature application (35°C)
④ Seasonal energy efficiency: low temperature heating in Average climate (EU Regulations No.811/2013 and No.813/2013)

Comby-Flow

THHEY 105÷112

Cooling capacity:
5,3÷11,9 kW

Heating capacity:
6,6÷13,7 kW

KEY FEATURES

- **Extremely compact and silent units**

Packaged water cooled reversible heat pumps on cooling circuit with water-cooling system. Range with scroll hermetic compressors and R410A refrigerant gas.

CONSTRUCTION FEATURES

- Compressor: hermetic, rotary scroll type, complete with thermal protection.
- Primary side (user) heat exchanger: adequately insulated stainless steel plates, complete with antifreeze heater and water flow differential pressure switch.
- Well or mains side (disposal) heat exchanger: with suitably insulated stainless steel plates, complete with antifreeze heater and water flow differential pressure switch.
- Control: microprocessor electronic control with Adaptive Function Plus logic.
- Structure: made of galvanised and painted steel plate with polyester powder coating, complete with soundproofed compressor.

MODELS

- THHEY: heat pump unit.

STANDARD SET UP

- Without electric circulation pump.
  Primary side (user): membrane expansion tank, safety valve, water drain valve, manual air vent valve, and pressure gauge.

PUMP SET UP

- With electric circulation pump.
  Primary side (user): pump unit complete with electric circulation pump, membrane expansion tank, safety valve, water drain valve, manual air vent valve and pressure gauge.

FACTORY FITTED ACCESSORIES

- Pressure switch valve and bypass solenoid valve (only THHEY).
- Low temperature water production.
- Digital input for double set-point
- 4-20mA analogue signal for shifting set-point.

SEPARATELY SUPPLIED ACCESSORIES

- Buffer tank.
- Buffer tank connection pipes.
- Water filter.
- Rubber anti-vibration mounts.
- Antifreeze heater on the buffer tank.
- Low pressure switch.
- 3-way valve for the production of domestic hot water.
- Outdoor air temperature probe for set-point compensation.
- Additional electrical resistance for heat pump, managed by regulation.
- Remote keypad with display.
- Clock board.
- Interfaces for serial communication with other devices.
- Serial converter (RS485/USB).
- Rhoss supervisors for unit monitoring and remote management.

Features

COOL HEAT · COMPRESSOR SCROLL · GAS R410A · INDOOR · ADAPTIVE FUNCTION PLUS · EUROVENT CERTIFIED PERFORMANCE www.eurovent-certification.com

	THHEY MODEL		105	107	109	112
❶	Heating capacity	kW	6,58	8,1	10,9	14
❶	Absorbed power	kW	2,08	2,8	3,35	4,5
❶	C.O.P.		3,16	2,89	3,03	3,1
❷	Heating capacity	kW	7,5	9,7	12,7	15
❷	Absorbed power	kW	1,6	2,1	2,72	3,33
❷	C.O.P.		4,68	4,61	4,67	4,51
❸	Heating capacity (geothermal)	kW	5,4	7,3	9,4	11,3
❸	Absorbed power (geothermal)	kW	1,5	2,15	2,78	3,34
❸	C.O.P. (geothermal)		3,62	3,39	3,38	3,39
❹	Cooling capacity	kW	5,3	6,8	9,2	11,9
❹	Absorbed power	kW	1,6	2,19	2,79	3,67
❹	E.E.R.		3,31	3,11	3,3	3,24
❺	Sound pressure	dB(A)	49	51	51	53
	Scroll compressors/steps	no.	1/1	1/1	1/1	1/1
	KA buffer tank water content	l	20	20	30	30
❹	Available circulator head	kPa	47	55	82	77
	Electrical supply	V-ph-Hz	230-1-50	230-1-50 / 400-3+N-50	230-1-50 / 400-3+N-50	230-1-50 / 400-3+N-50
	DIMENSIONS AND WEIGHTS		**105**	**107**	**109**	**112**
	L - Width	mm	585	585	660	660
	H - STANDARD height - PUMP	mm	535	535	535	535
	H - STANDARD height - PUMP + KA	mm	855	855	855	855
	P - Depth	mm	386	386	420	420
❻	Weight	kg	78	83	94	97
	KA Weight	kg	28	28	33	33

Data at the following conditions:
❶ Hot water: 40/45°C - Evaporator water: 10/7°C.
❷ Hot water: 30/35°C - Evaporator water: 10/7°C.
❸ Hot water: 30/35°C - Evaporator water: 0/–3°C, 30% glycol.
❹ Chilled water: 12/7°C - Condenser water: 30/35°C.
❺ In open field (Q = 2) at 1 m from the unit.
❻ Weight refers to the most complete setup.
Performance according to EN 14511. Standard Setup
KA = buffer tank.
KTC = connecting pipe.

	SEASONAL ENERGY PERFORMANCE		105	107	109	112
	THHEY MODEL SEASONAL PERFORMANCE IN HEATING MODE					
③	Pdesignh (EN 14825)	kW	9	12	16	19
③	SCOP (EN 14825)		5,38	5,56	5,54	5,18
④	η_s	%	207	214	214	199
④	Energy class		A+++	A+++	A+++	A+++

③ In Average climatic conditions, low temperature application (35°C)
④ Seasonal energy efficiency: low temperature heating in Average climate (EU Regulations No.811/2013 and No.813/2013)

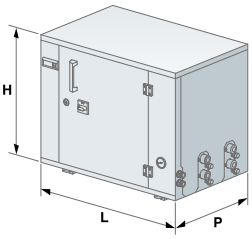

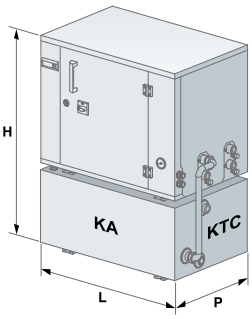

Y-Flow

TCHEY-THHEY 115÷240

Cooling capacity:
15,5÷41,7 kW

Heating capacity:
17,4÷45,1 kW

KEY FEATURES

- **Applications with well water, water mains or geothermal probes**
- **Plug&Play Unit with upward hydraulic connections**

Packaged water-cooled water chillers and reversible heat pumps on the cooling circuit with water-cooling system. Range with scroll hermetic compressors and R410A refrigerant gas.

CONSTRUCTION FEATURES

- Compressor: hermetic rotary scroll complete with thermal protection and crankcase heater.
- Primary side (user) heat exchanger: adequately insulated stainless steel plates, complete with antifreeze heater and water flow differential pressure switch.
- Disposal unit side (well/mains/geothermal probes) heat exchanger: adequately insulated stainless steel plates, complete with antifreeze heater and water flow differential pressure switch (for THHEY).
- Control: microprocessor electronic control with Adaptive Function Plus logic.
- Structure: made of galvanised and painted steel plate with polyester powder coating, internally covered with soundproof panelling.

MODELS

- TCHEY: unit designed for cooling only.
- THHEY: heat pump unit.

STANDARD SET UP

Without electric circulation pump and hydraulic accessories.

FACTORY FITTED ACCESSORIES

- PUMP:
  - Primary side (user): pump unit complete with electric circulation pump with standard or oversized head, membrane expansion tank, safety valve, water fill/drain valve, manual air vent valve and pressure gauge.
  - Disposal side (geothermal probes/dry cooler): pump unit complete with phase cutting electric pump, water fill/drain valve and manual air vent valve.
- Silenced set up.
- Pressure switch valve with water flow lock solenoid.
- Pressure switch valve with water flow lock solenoid and bypass solenoid valve.
- Set up for heat pump operation (for TCHEY only).
- Soft-start device.
- Low temperature water production.
- Digital input for double set-point.
- 4-20mA analogue signal for shifting set-point.
- Refrigerant leak detector.
- Forced limit of power consumption.

SEPARATELY SUPPLIED ACCESSORIES

- 3-way valve for the production of domestic hot water.
- Additional electrical resistance for heat pump, managed by regulation.
- Outdoor air temperature probe for set-point compensation.
- Free-cooling kit.
- Water filter.
- Rubber anti-vibration mounts.
- Remote keypad with display.
- Interfaces for serial communication with other devices.
- Serial converter (RS485/USB).
- Rhoss supervisors for unit monitoring and remote management.

Features

COOL · COOL HEAT · COMPRESSOR SCROLL · GAS R410A · INDOOR · ADAPTIVE FUNCTION PLUS · EUROVENT CERTIFIED PERFORMANCE www.eurovent-certification.com

	TCHEY MODEL		115	118	122	125	230	240
❶	Cooling capacity	kW	15,5	18,4	22,7	26,3	30,5	41,7
❶	Absorbed power	kW	3,27	3,49	4,5	5,01	6,64	8,07
❶	E.E.R.		4,74	5,27	5,04	5,25	4,59	5,17
	THHEY MODEL		**115**	**118**	**122**	**125**	**230**	**240**
❷	Heating capacity	kW	17,4	20,2	25,1	28,9	35,9	45,1
❷	Absorbed power	kW	3,95	4,41	5,59	6,3	8,05	10,11
❷	C.O.P.		4,4	4,58	4,49	4,59	4,46	4,46
❸	Heating capacity	kW	18,6	21,5	26,6	30,7	38,5	47,9
❸	Absorbed power	kW	3,29	3,55	4,45	5,04	6,63	8,09
❸	C.O.P.		5,66	6,05	5,97	6,09	5,81	5,92
❹	Heating capacity (geothermal)	kW	13,4	15,3	18,6	21,7	27,7	33,8
❹	C.O.P. (geothermal)		4,12	4,21	4,37	4,49	4,23	4,3
❶	Cooling capacity	kW	13,9	16,3	20	23,1	27,3	35,9
❶	E.E.R.		3,81	4,13	4,15	4,19	3,79	4,09
	TCHEY - THHEY MODEL		**115**	**118**	**122**	**125**	**230**	**240**
❺	Sound pressure	dB(A)	42	42	46	47	48	52
	Scroll compressors/steps	no.	1/1	1/1	1/1	1/1	2/2	2/2
	Circuits	no.	1	1	1	1	1	1
❶	Std system side electric pump available head	kPa	88	81	73	113	105	115
	Electrical supply	V-ph-Hz	400-3+N-50	400-3+N-50	400-3+N-50	400-3+N-50	400-3+N-50	400-3+N-50
	DIMENSIONS AND WEIGHTS		**115**	**118**	**122**	**125**	**230**	**240**
	L - Width	mm	700	700	700	700	700	700
	H - STANDARD height - PUMP	mm	1140	1140	1140	1140	1140	1140
	P - Depth	mm	560	560	780	780	780	780
❻	Weight	kg	193	193	230	254	278	298

Data at the following conditions:
❶ Chilled water: 12/7°C - Condenser water: 30/35°C.
❷ Hot water: 40/45°C - Evaporator water: 10/7°C.
❸ Hot water: 30/35°C - Evaporator water: 10/7°C.
❹ Hot water: 30/35°C - Evaporator water: 0/–3°C, 30% glycol.
❺ In open field (Q = 2) at 1 m from the unit, with silenced setup.
❻ Weight refers to the most complete setup.
Performance according to EN 14511.

	SEASONAL ENERGY PERFORMANCE		115	118	122	125	230	240
	TCHEY MODEL SEASONAL PERFORMANCE IN COOLING MODE							
①	Pdesignc (EN 14825)	kW	15,5	18,4	22,7	26,3	30,5	41,7
①	SEER (EN 14825)		5,33	5,57	5,55	5,7	6,06	5,81
②	$\eta_{s,c}$	%	210	220	219	225	239	229
	THHEY MODEL SEASONAL PERFORMANCE IN HEATING MODE							
③	Pdesignh (EN 14825)	kW	23	27	33	38	48	59
③	SCOP (EN 14825)		6,1	6,43	6,44	6,54	6,67	6,8
④	η_s	%	236	249	249	254	259	264
④	Energy class		A+++	A+++	A+++	A+++	A+++	A+++

① Low temperature application (7°C)
② Seasonal energy efficiency: low temperature cooling (EU Regulation 2016/2281)
③ In Average climatic conditions, low temperature application (35°C)
④ Seasonal energy efficiency: low temperature heating in Average climate (EU Regulations No.811/2013 and No.813/2013)

Web code 245÷2185: **YF021**
Web code 4180÷4410: **YF031**

Y-Flow

TCHEY 245÷4360 / THHEY 245÷4410

Cooling capacity:
41,2÷373,9 kW

Heating capacity:
50,2÷464,4 kW

TCHEY 2100

KEY FEATURES

- **Applications with well water, water mains or geothermal probes**
- **Integrated MASTER/SLAVE control**
- **HT65 version for 65°C water production (°)**

Packaged water-cooled water chillers and reversible heat pumps on the cooling circuit with water-cooling system. Range with scroll hermetic compressors and R410A refrigerant gas.

CONSTRUCTION FEATURES

- Compressor: hermetic rotary scroll complete with thermal protection and crankcase heater.
- Primary side (user) heat exchanger: adequately insulated stainless steel plates, complete with antifreeze heater and water flow differential pressure switch.
- Disposal unit side (well/mains/geothermal probes) heat exchanger: adequately insulated stainless steel plates, complete with antifreeze heater and water flow differential pressure switch (for THHEY).
- Control: microprocessor electronic control with Adaptive Function Plus logic.
- Structure: made of galvanised and painted steel plate with polyester powder coating.
- The unit is also complete with:
  - compressor circuit breaker switches;
  - display of cooling circuit high and low pressure;
  - Master/Slave control up to 4 units in parallel;
  - clock board;
  - 0-10V analogue signal for condensing/evaporating control performed by external device;
  - control of Variable Primary Flow (VPF_R).

VERSIONS

- LT - Hot water production up to 52°C.
- HT - Hot water production up to 55°C.Models
- TCHEY: unit designed for cooling only.
- THHEY: heat pump unit.

MODELS

- TCHEY: unit designed for cooling only.
- THHEY: heat pump unit.

FACTORY FITTED ACCESSORIES

- PUMP primary side (user): with single or double electric pump, including an automatic pump in standby, complete with expansion tank, safety valve, water fill/drain valve, air vent valve and pressure gauge. The electric pumps are available in the low or high pressure head versions. ➔
- PUMP disposal side (geothermal probes/dry cooler): with single or double electric pump regulated via inverter including an automatic actuation pump in standby. ➔
- Desuperheater. ➔
- 100% heat recovery unit (mod. 245-4360). ➔
- Set up for heat pump operation (for TCHEY only).
- Inverter pump control for unit start-up.
- Power factor correction capacitors (cosϕ > 0.94).
- Soft-starter.
- Energy parameter measuring device.
- Cooling circuit outlet and inlet valves.
- Refrigerant leak detector.
- Forced limit of power consumption.
- Cooling circuit high and low pressure gauges.
- Double safety valves.
- Silenced set up.
- Control of min/max power supply voltage.

➔ The units can be equipped with up to a maximum of 2 electric pumps in mod. 245-2185 and 4 electric pumps in mod. 4180-4410. The PUMP set up is not included when there is a recovery unit or desuperheater.

Features

THHEY 4260

- Low temperature water production.
- Digital input for double set-point.
- 4-20mA analogue signal for shifting set-point.
- Interfaces for serial communication with other devices.
- Rubber anti-vibration mounts.

SEPARATELY SUPPLIED ACCESSORIES

- 3-way modulating condensing control valve.
- 2-way modulating condensing control valve.
- Outdoor air temperature probe for set-point compensation.
- Free-cooling kit (mod. 245-2185).
- Water filter.
- Remote keypad with display.
- Thermostat with display.
- Serial converter (RS485/USB).
- Rhoss supervisors for unit monitoring and remote management.
- Rhoss sequencer for integrated management of multiple chillers.

Y-Flow

TCHEY 245÷4360 / THHEY 245÷4410

	TCHEY HT MODEL		245	250	260	270	275	290	2100	2115	2130	2145	2165	2185
❶	Cooling capacity	kW	45,1	53,1	60,4	69	75,6	89,8	102,8	117	130,7	145,4	165,1	184,3
❶	Absorbed power	kW	9,8	11,34	13,1	14,93	16,39	19,1	22,34	25,43	28,78	31,67	36,85	41,79
❶	E.E.R.		4,6	4,68	4,61	4,62	4,61	4,7	4,6	4,6	4,54	4,59	4,48	4,41
	THHEY HT MODEL		**245**	**250**	**260**	**270**	**275**	**290**	**2100**	**2115**	**2130**	**2145**	**2165**	**2185**
❷	Heating capacity	kW	50,2	59	67,8	75,6	84	102,2	116,5	133,6	147,7	163,2	186,6	209,4
❷	Absorbed power	kW	12,18	13,91	15,87	17,66	19,85	23,76	28,2	31,36	35,25	39,32	45,73	51,96
❷	C.O.P.		4,12	4,24	4,27	4,28	4,23	4,3	4,13	4,26	4,19	4,15	4,08	4,03
❶	Cooling capacity	kW	41,3	48,5	55,2	63	69,2	82	96,1	109,3	120,8	134,5	152,4	170,1
❶	E.E.R.		4,32	4,38	4,36	4,31	4,31	4,31	4,3	4,35	4,3	4,29	4,08	4,02
	TCHEY - THHEY MODEL		**245**	**250**	**260**	**270**	**275**	**290**	**2100**	**2115**	**2130**	**2145**	**2165**	**2185**
❸	Sound power	dB(A)	67	67	68	68	69	70	71	72	73	74	74	75
	Scroll compressors/steps	n.	2/2	2/2	2/2	2/2	2/3	2/2	2/3	2/3	2/3	2/2	2/3	2/2
	Circuits	n.	1	1	1	1	1	1	1	1	1	1	1	1
	Electrical supply	V-ph-Hz	400-3+N-50											
	DIMENSIONS AND WEIGHTS		**245**	**250**	**260**	**270**	**275**	**290**	**2100**	**2115**	**2130**	**2145**	**2165**	**2185**
❹	L - Width	mm	1020	1020	1020	1020	1020	1020	1270	1270	1270	1270	1270	1270
❺	L - Width	mm	1250	1250	1250	1250	1250	1250	1500	1500	1500	1500	1500	1500
	H - Height	mm	1470	1470	1470	1470	1470	1470	1620	1620	1620	1620	1620	1620
	P - Depth	mm	870	870	870	870	870	870	870	870	870	870	870	870
❻	Weight TCHEY LT	kg	395	405	410	425	435	450	695	710	730	755	770	775
❻	Weight TCHEY HT	kg	425	430	440	460	470	480	740	770	800	825	850	855
❻	Weight THHEY LT	kg	405	415	425	440	450	460	700	720	750	755	790	800
❻	Weight THHEY HT	kg	435	445	455	470	480	495	755	790	820	845	870	880

Data at the following conditions:

❶ Chilled water: 12/7°C. - Condenser water: 30/35°C.

❷ Hot water: 40/45°C. - Evaporator water: 10/7°C.

❸ Total sound power level in dB(A) based on measurements carried out in accordance with regulation UNI EN-ISO 9614.

❹ Width referring to the unit with standard setup or supplied with "recovery" or "desuperheater" accessories.

❺ Width referring to the PUMP setup, up to a maximum of 2 pumps in mod. 245-2185 (2 user side or disposal unit side pumps or 1 user side pump + 1 disposal unit side pump) and up to a maximum of 4 pumps in mod. 4180-4410 (2 pumps on user side and 2 pumps on disposal unit side).

❻ Empty weight

Performance according to EN 14511.

	SEASONAL ENERGY PERFORMANCE		245	250	260	270	275	290	2100	2115	2130	2145	2165	2185
	TCHEY HT MODEL SEASONAL PERFORMANCE IN COOLING MODE													
①	Pdesignc (EN 14825)	kW	45,1	53,1	60,4	69	75,6	89,8	102,8	117	130,7	145,4	165,1	184,3
①	SEER (EN 14825)		5,75	5,98	6,08	5,94	6,26	6,04	6,02	6,17	6,1	6,01	6,2	5,9
②	$\eta_{s,c}$	%	227	236	240	235	248	239	238	244	241	237	245	233
	THHEY HT MODEL SEASONAL PERFORMANCE IN COOLING MODE													
①	Pdesignc (EN 14825)	kW	-	-	-	-	-	-	-	-	-	-	-	-
①	SEER (EN 14825)		-	-	-	-	-	-	-	-	-	-	-	-
②	$\eta_{s,c}$	%	-	-	-	-	-	-	-	-	-	-	-	-
	THHEY HT MODEL SEASONAL PERFORMANCE IN HEATING MODE													
③	Pdesignh (EN 14825)	kW	61	71	81	91	101	122	140	159	174	196	224	250
③	SCOP (EN 14825)		6,54	6,59	6,48	6,46	6,72	6,38	6,1	6,38	6,16	6,1	6,16	5,89
④	η_s	%	254	255	251	251	261	247	236	247	239	236	239	228
④	Energy class		A+++	-	-	-	-	-	-	-	-	-	-	-

① Low temperature application (7°C)

② Seasonal energy efficiency: low temperature cooling (EU Regulation 2016/2281)

③ In Average climatic conditions, low temperature application (35°C)

④ Seasonal energy efficiency: low temperature heating in Average climate (EU Regulations No.811/2013 and No.813/2013)

	TCHEY HT MODEL		4180	4205	4235	4260	4290	4330	4360	4410
❶	Cooling capacity	kW	180,9	206,9	232,6	260,2	287,5	326	363,1	-
❶	Absorbed power	kW	37,45	42,83	48,25	54,2	60,27	69,36	79,1	-
❶	E.E.R.		4,83	4,83	4,82	4,8	4,77	4,7	4,59	-
	THHEY HT MODEL		**4180**	**4205**	**4235**	**4260**	**4290**	**4330**	**4360**	**4410**
❷	Heating capacity	kW	201,8	230,5	258,7	291,7	323,7	369	413,8	464,1
❷	Absorbed power	kW	45,55	52,86	60,3	67,83	75,63	87,64	99,23	116,6
❷	C.O.P.		4,43	4,36	4,29	4,3	4,28	4,21	4,17	3,98
❶	Cooling capacity	kW	160,7	183,7	206,8	231,7	255,4	293	330,4	374
❶	E.E.R.		4,42	4,29	4,22	4,19	4,16	4,14	4,16	4,1
	TCHEY - THHEY MODEL		**4180**	**4205**	**4235**	**4260**	**4290**	**4330**	**4360**	**4410**
❸	Sound power	dB(A)	77	77	78	79	80	81	82	83
	Scroll compressors/steps	n.	4/4	4/4	4/4	4/4	4/4	4/4	4/4	4/4
	Circuits	n.	2	2	2	2	2	2	2	2
	Electrical supply	V-ph-Hz	400-3-50	400-3-50	400-3-50	400-3-50	400-3-50	400-3-50	400-3-50	400-3-50
	DIMENSIONS AND WEIGHTS		**4180**	**4205**	**4235**	**4260**	**4290**	**4330**	**4360**	**4410**
❹	L - Width	mm	2600	2600	2600	2600	2600	2600	2600	2600
❺	L - Width	mm	3734	3734	3734	3734	3734	3734	3734	3734
	H - Height	mm	1860	1860	1860	1860	1860	1860	1860	1860
	P - Depth	mm	870	870	870	870	870	870	870	870
❻	Weight TCHEY LT	kg	1350	1410	1440	1460	1500	1530	1570	-
❻	Weight TCHEY HT	kg	1440	1470	1510	1540	1600	1650	1680	-
❻	Weight THHEY LT	kg	1380	1440	1470	1500	1530	1560	1600	1750
❻	Weight THHEY HT	kg	1470	1500	1550	1570	1630	1680	1720	1790

Data at the following conditions:
❶ Chilled water: 12/7°C. - Condenser water: 30/35°C.
❷ Hot water: 40/45°C. - Evaporator water: 10/7°C.
❸ Total sound power level in dB(A) based on measurements carried out in accordance with regulation UNI EN-ISO 9614.
❹ Width referring to the unit with standard setup or supplied with "recovery" or "desuperheater" accessories.
❺ Width referring to the PUMP setup, up to a maximum of 2 pumps in mod. 245-2185 (2 user side or disposal unit side pumps or 1 user side pump + 1 disposal unit side pump) and up to a maximum of 4 pumps in mod. 4180-4410 (2 pumps on user side and 2 pumps on disposal unit side).
❻ Empty weight
Performance according to EN 14511.

	SEASONAL ENERGY PERFORMANCE		4180	4205	4235	4260	4290	4330	4360	4410
	TCHEY HT MODEL SEASONAL PERFORMANCE IN COOLING MODE									
①	Pdesignc (EN 14825)	kW	180,9	206,9	232,6	260,2	287,5	326	363,1	-
①	SEER (EN 14825)		5,89	6,1	6,3	6,32	6,36	6,28	6,21	-
②	$\eta_{s,c}$	%	233	241	249	250	251	248	245	-
	THHEY HT MODEL SEASONAL PERFORMANCE IN COOLING MODE									
①	Pdesignc (EN 14825)	kW	-	-	-	-	255,4	293	330,4	374
①	SEER (EN 14825)		-	-	-	-	6,05	6	6,11	5,7
②	$\eta_{s,c}$	%	-	-	-	-	239	237	241	225
	THHEY HT MODEL SEASONAL PERFORMANCE IN HEATING MODE									
③	Pdesignh (EN 14825)	kW	262	302	340	383	-	-	-	-
③	SCOP (EN 14825)		6,93	6,68	6,54	6,52	-	-	-	-
④	η_s	%	269	259	253	253	-	-	-	-
④	Energy class		-	-	-	-	-	-	-	-

① Low temperature application (7°C)
② Seasonal energy efficiency: low temperature cooling (EU Regulation 2016/2281)
③ In Average climatic conditions, low temperature application (35°C)
④ Seasonal energy efficiency: low temperature heating in Average climate (EU Regulations No.811/2013 and No.813/2013)

FullFLOW ECO VFD (1+i)

TCHITE 1280÷21220

Cooling capacity:
285,6÷1217,2 kW

TCHITE 2710 with TOBT accessory

KEY FEATURES

- **HFO R1234ze ecological gas**
- **High efficiency levels**
- **Continuous power regulation**
- **Various soundproofing options**
- **Touch interface (optional)**
- **Free-Cooling management**
- **Integrated MASTER/SLAVE control**

Water-cooled water chillers. Range with semi-hermetic screw compressors with variable Vi, inverter regulation and R1234ze refrigerant gas.

CONSTRUCTION FEATURES

- Compressor: high energy efficiency semi-hermetic screw driven by fixed speed motor with linear capacity control and/or variable Vi regulated by inverter (25-100% single-compressor sizes, 12.5-100% bi-compressor sizes), limited start, complete with integral protection, casing heater, oil level sensor and shut-off valves on delivery and intake piping.
- Water side heat exchanger (evaporator): low refrigerant charge spray flooded type shell and tube exchanger, complete with closed cell polyurethane foam rubber insulation, water flow differential pressure switch and Victaulic fittings.
- Water side heat exchanger (condenser): tube and shell complete with safety valve, service valve on the high-pressure refrigerant gas circuit, and a water flow differential pressure switch and Victaulic fittings.
- Control: microprocessor electronic control.
- Structure: made of galvanised and painted steel plate with polyester powder coating.
- The unit is also complete with:
  - clock board;
  - electronic expansion valve;
  - display of cooling circuit high/low pressure;
  - Master/Slave control up to 4 units in parallel;
  - 0-10V analogue signal for condensing control from external device;
  - control of Variable Primary Flow (VPF_R).

VERSIONS

- T - High efficiency version

MODELS

- TCHITE: unit designed for cooling only.

FACTORY FITTED ACCESSORIES

- Free-Cooling management
- Dry-Cooler management
- 100% heat recovery unit.
- Set up for heat pump operation.
- Power factor correction capacitors (cosϕ > 0.94).
- Circuit breaker switches.
- Forced limit of power consumption.
- Soft starter.
- Electro-mechanical flow switch.
- EMC anti-disturbance filters.
- Energy parameter measuring device.
- Compressor soundproof enclosures.
- Full acoustic casing.
- Refrigerant leak detector.
- Double safety valves.
- Digital input for double set-point.
- 4-20 mA analogue signal for shifting set-point.
- Evaporator antifreeze heater.
- Control of min/max power supply voltage.
- Interfaces for serial communication with other devices.
- Colour touch user keypad (fitted on the machine or remotely) with 7" display.
- Anti-vibration mounts.

SEPARATELY SUPPLIED ACCESSORIES

- Remote keypad with display.
- Outdoor air temperature probe for set-point compensation.
- Thermostat with display.
- Rhoss supervisors for unit monitoring and remote management.
- Rhoss sequencer for integrated management of multiple chillers.

Features

COOL · SCREW COMPRESSOR · INVERTER · LOW GWP · GAS R1234 ze · INDOOR · EUROVENT CERTIFIED PERFORMANCE www.eurovent-certification.com

	TCHITE MODEL		1280	1340	1430	2520	2580	2650	2710	2800	2890	2970	21090	21220
❶	Nominal cooling capacity	kW	285,6	346,6	434,5	524,4	584,4	648,4	719,4	800,4	897,3	974,3	1091,2	1217,2
❶	E.E.R.		5,2	5,19	5,05	5,47	5,44	5,43	5,5	5,33	5,32	5,39	5,54	5,54
❶	Absorbed power	kW	54,9	66,8	86	95,9	107,4	119,4	130,8	150,2	168,7	180,8	197	219,7
❷	Sound power	dB(A)	97	99	101	98	98	100	100	102	103	103	102	103
❷	Sound power with enclosure accessory	dB(A)	93	95	97	94	94	96	96	98	99	99	98	99
	Screw compressors	n.	1	1	1	2	2	2	2	2	2	2	2	2
	Circuits	n.	1	1	1	2	2	2	2	2	2	2	2	2
	Electrical supply	V-ph-Hz	400-3-50											
	DIMENSIONS AND WEIGHTS		**1280**	**1340**	**1430**	**2520**	**2580**	**2650**	**2710**	**2800**	**2890**	**2970**	**21090**	**21220**
	L - Width	mm	3859	3859	3859	4008	4008	3990	4329	4407	4407	4407	4501	4586
	H - Height	mm	1830	1830	1830	1910	1910	2040	2040	2040	2040	2040	2080	2080
	P - Depth	mm	1531	1531	1591	1676	1676	1676	1676	1814	1844	1844	1964	2009
❸	TCHITE weight	kg	2335	2440	2535	4095	4190	4735	5205	5355	5620	5765	6790	7135

Data at the following conditions:
❶ Chilled water: 7/12°C. - Condenser inlet water: 30/35°C.
❷ Total sound power level in dB(A) based on measurements carried out in accordance with regulation UNI EN-ISO 9614.
❸ Empty weight.
Performance according to EN 14511.

	SEASONAL ENERGY PERFORMANCE		1280	1340	1430	2520	2580	2650	2710	2800	2890	2970	21090	21220
	TCHITE MODEL SEASONAL PERFORMANCE IN COOLING MODE													
①	Pdesignc (EN 14825)	kW	285,6	346,6	434,5	524,4	584,4	648,4	719,4	800,4	897,3	974,3	1091,2	1217,2
①	SEER (EN 14825)		8,41	8,18	8,09	8,11	8,34	8,23	7,84	8,02	7,88	7,94	7,97	7,96
②	$\eta_{s,c}$	%	333	324	321	321	331	326	311	318	312	315	316	315

① Low temperature application (7°C)
② Seasonal energy efficiency: low temperature cooling (EU Regulation 2016/2281)

FullFLOW VFD (1+i)

TCHITL 1390÷21700

Cooling capacity:
389,5÷1701,1 kW

TCHITL 21000 with TOBT accessory

KEY FEATURES

- **Non-flammable reduced GWP gas**
- **High efficiency levels**
- **Continuous power regulation**
- **Various soundproofing options**
- **Touch interface (optional)**
- **Free-Cooling management**
- **Integrated MASTER/SLAVE control**

Water-cooled water chillers. Range with semi-hermetic screw compressors with variable Vi, inverter regulation and R513A refrigerant gas.

CONSTRUCTION FEATURES

- Compressor: high energy efficiency semi-hermetic screw driven by fixed speed motor with linear capacity control and/or variable Vi regulated by inverter (25%-100% single-compressor sizes, 12.5-100% bi-compressor sizes), limited start, complete with integral protection, casing heater, oil level sensor and shut-off valves on delivery and intake piping.
- Water side heat exchanger (evaporator): low refrigerant charge spray flooded type shell and tube exchanger, complete with closed cell polyurethane foam rubber insulation, water flow differential pressure switch and Victaulic fittings.
- Water side heat exchanger (condenser): tube and shell complete with safety valve, service valve on the high-pressure refrigerant gas circuit, and a water flow differential pressure switch and Victaulic fittings.
- Control: microprocessor electronic control.
- Structure: made of galvanised and painted steel plate with polyester powder coating.
- The unit is also complete with:
  - clock board;
  - electronic expansion valve;
  - display of cooling circuit high/low pressure;
  - Master/Slave control up to 4 units in parallel;
  - 0-10V analogue signal for condensing control from external device;
  - control of Variable Primary Flow (VPF_R).

VERSIONS

- T - High efficiency version

MODELS

- TCHITL: unit designed for cooling only.

FACTORY FITTED ACCESSORIES

- Free-Cooling management
- Dry-Cooler management
- 100% heat recovery unit.
- Set up for heat pump operation.
- Power factor correction capacitors (cosφ > 0.94).
- Circuit breaker switches.
- Forced limit of power consumption.
- Soft starter.
- Electro-mechanical flow switch.
- EMC anti-disturbance filters.
- Energy parameter measuring device.
- Compressor soundproof enclosures.
- Full acoustic casing.
- Refrigerant leak detector.
- Double safety valves.
- Digital input for double set-point.
- 4-20 mA analogue signal for shifting set-point.
- Evaporator antifreeze heater.
- Control of min/max power supply voltage.
- Interfaces for serial communication with other devices.
- Colour touch user keypad (fitted on the machine or remotely) with 7" display.
- Anti-vibration mounts.

SEPARATELY SUPPLIED ACCESSORIES

- Remote keypad with display.
- Outdoor air temperature probe for set-point compensation
- Thermostat with display.
- Rhoss supervisors for unit monitoring and remote management.
- Rhoss sequencer for integrated management of multiple chillers.

Features

COOL · SCREW COMPRESSOR · INVERTER · LOW GWP · GAS R513A · INDOOR · EUROVENT CERTIFIED PERFORMANCE www.eurovent-certification.com

	TCHITL MODEL		1390	1490	1600	2720	2810	2900	21000	21110	21260	21360	21520	21700
❶	Nominal cooling capacity	kW	389,5	486,5	610,4	727,4	816,3	920,3	1001,3	1117,2	1260,2	1361,1	1524,2	1701,1
❶	E.E.R.		5,18	5,16	5,11	5,5	5,41	5,5	5,45	5,32	5,36	5,4	5,57	5,55
❶	Absorbed power	kW	75,2	94,3	119,5	132,3	150,9	167,3	183,7	210	235,1	252,1	273,6	306,5
❷	Sound power	dB(A)	97	99	101	98	98	100	100	102	103	103	102	103
❷	Sound power with enclosure accessory	dB(A)	93	95	97	94	94	96	96	98	99	99	98	99
	Screw compressors	n.	1	1	1	2	2	2	2	2	2	2	2	2
	Circuits	n.	1	1	1	2	2	2	2	2	2	2	2	2
	Electrical supply	V-ph-Hz	400-3-50	400-3-50	400-3-50	400-3-50	400-3-50	400-3-50	400-3-50	400-3-50	400-3-50	400-3-50	400-3-50	400-3-50
	DIMENSIONS AND WEIGHTS		**1390**	**1490**	**1600**	**2720**	**2810**	**2900**	**21000**	**21110**	**21260**	**21360**	**21520**	**21700**
	L - Width	mm	3859	3859	3859	3990	3990	3990	4329	4407	4407	4407	4501	4586
	H - Height	mm	1830	1830	1830	2040	2040	2040	2040	2040	2080	2080	2090	2090
	P - Depth	mm	1531	1531	1591	1676	1676	1676	1676	1814	1844	1844	1979	2024
❸	TCHITL weight	kg	2460	2530	2605	4700	4830	4915	5385	5600	6325	6455	7765	8115

Data at the following conditions:
❶ Chilled water: 7/12°C. - Condenser inlet water: 30/35°C.
❷ Total sound power level in dB(A) based on measurements carried out in accordance with regulation UNI EN-ISO 9614.
❸ Empty weight.
Performance according to EN 14511.

	SEASONAL ENERGY PERFORMANCE		1390	1490	1600	2720	2810	2900	21000	21110	21260	21360	21520	21700
	TCHITL MODEL SEASONAL PERFORMANCE IN COOLING MODE													
①	Pdesignc (EN 14825)	kW	389,5	486,5	610,4	727,4	816,3	920,3	1001,3	1117,2	1260,2	1361,1	1524,2	1701,1
①	SEER (EN 14825)		8,52	8,22	8,16	8,18	8,43	8,34	8,1	8,04	8	8,03	8,1	7,96
②	$\eta_{s,c}$	%	338	326	323	324	334	331	321	319	317	318	321	316

① Low temperature application (7°C)
② Seasonal energy efficiency: low temperature cooling (EU Regulation 2016/2281)

FullFLOW DX

TCHVTL 1200÷21450

Cooling capacity:
201,7÷1.455,2 kW

KEY FEATURES

- **Non-flammable reduced GWP gas**
- **Various soundproofing options**
- **Touch interface (optional)**
- **Free-Cooling management**
- **Integrated MASTER/SLAVE control**

Water-cooled water chillers. Range with stepless semi-hermetic screw compressors and R513A ecological refrigerant gas.

CONSTRUCTION FEATURES

- Compressor: high energy efficiency semi-hermetic screw compressor with control of linear capacity, with star-delta or part-winding start up (depending on models) and complete with integral protection, casing heater and refrigerant gas outlet piping shut-off valve.
- Water side heat exchanger (evaporator): dry expansion shell and tube exchanger with counterflow heat exchange, complete with closed cell polyurethane foam rubber insulation, water flow differential pressure switch and Victaulic fittings. Antifreeze heater sizes 1200-1230.
- Water side heat exchanger (condenser): tube and shell complete with differential pressure switch, safety valve, service valve on the high-pressure refrigerant gas circuit.
- Control: microprocessor electronic control.
- Structure: made of galvanised and painted steel plate with polyester powder coating.
- The unit is also complete with:
  - clock board;
  - display of cooling circuit high/low pressure;
  - electronic expansion valve;
  - Master/Slave control up to 4 units in parallel;
  - 0-10V analogue signal for condensing control from external device;
  - control of Variable Primary Flow (VPF_R).

VERSIONS

- T - High efficiency version

MODELS

- TCHVTL: unit designed for cooling only.

FACTORY FITTED ACCESSORIES

- 100% heat recovery unit.
- Free-Cooling Management.
- Dry-Cooler Management.
- Set up for heat pump operation.
- Condenser Victaulic fittings.
- Power factor correction capacitors (cosϕ > 0.94).
- Circuit breaker switches.
- Forced limit of power consumption.
- Soft starter.
- Inlet compressor shut-off valves.
- Energy parameter measuring device.
- Electro-mechanical flow switch.
- Digital input for double set-point.
- Compressor soundproof enclosures.
- Refrigerant leak detector.
- Full acoustic casing.
- Compressor oil level sensor.
- Double safety valves.
- Control of min/max power supply voltage.
- 4-20 mA analogue signal for shifting set-point.
- Evaporator antifreeze heater (sizes 1290-21450).
- Interfaces for serial communication with other devices.
- Colour touch user keypad (fitted on the machine or remotely) with 7" display.
- Anti-vibration mountings supplied loose.
- Protective packaging

SEPARATELY SUPPLIED ACCESSORIES

- Remote keypad with display.
- Outdoor air temperature probe for set-point compensation
- Thermostat with display.
- Rhoss supervisors for unit monitoring and remote management.
- Rhoss sequencer for integrated management of multiple chillers.

Features

COOL · SCREW COMPRESSOR · LOW GWP · GAS R513A · INDOOR · EUROVENT CERTIFIED PERFORMANCE www.eurovent-certification.com

	TCHVTL MODEL		1200	1230	1290	1320	1380
❶	Nominal cooling capacity	kW	201,7	229,7	289,7	315,6	374,5
❶	E.E.R.		4,66	4,65	4,73	4,65	4,74
❶	Absorbed power	kW	43,3	49,4	61,2	67,9	79
❷	Sound power	dB(A)	94	94	96	96	96
	Screw compressors	no.	1	1	1	1	1
	Circuits	no.	1	1	1	1	1
	Electrical supply	V-ph-Hz			400-3-50		
	DIMENSIONS AND WEIGHT		**1200**	**1230**	**1290**	**1320**	**1380**
	L - Width	mm	2860	2860	3460	3460	3460
	H - Height	mm	1670	1670	1670	1670	1670
	P - Depth	mm	1000	1000	1000	1000	1000
❸	TCHVTL weight	kg	1300	1320	1720	1730	1740

	SEASONAL ENERGY PERFORMANCE		1200	1230	1290	1320	1380
	TCHVTL MODEL SEASONAL PERFORMANCE IN COOLING MODE						
①	Pdesignc (EN 14825)	kW	201,7	229,7	289,7	315,6	374,5
①	SEER (EN 14825)		5,82	5,82	5,62	5,73	5,82
②	$\eta_{s,c}$	%	230	230	222	226	230

	TCHVTL MODEL		2430	2490	2540	2620	2690	2770	2860	2950
❶	Nominal cooling capacity	kW	433,6	487,5	543,5	618,4	691,4	774,4	859,4	950,4
❶	E.E.R.		4,9	4,77	4,8	4,77	4,81	4,9	4,9	4,92
❶	Absorbed power	kW	88,5	102,2	113,2	129,6	143,7	158	175,4	193,2
❷	Sound power	dB(A)	97	97	97	97	97	98	98	99
	Screw compressors	no.	2	2	2	2	2	2	2	2
	Circuits	no.	2	2	2	2	2	2	2	2
	Electrical supply	V-ph-Hz	400-3-50	400-3-50	400-3-50	400-3-50	400-3-50	400-3-50	400-3-50	400-3-50
	DIMENSIONS AND WEIGHT		**2430**	**2490**	**2540**	**2620**	**2690**	**2770**	**2860**	**2950**
	L - Width	mm	4060	4060	4060	4210	4240	4670	4710	4850
	H - Height	mm	1850	1850	1850	1900	1900	1980	1980	2130
	P - Depth	mm	1320	1320	1320	1320	1320	1320	1320	1320
❸	TCHVTL weight	kg	2400	2400	2750	3140	3260	3510	3630	4640

	SEASONAL ENERGY PERFORMANCE		2430	2490	2540	2620	2690	2770	2860	2950
	TCHVTL MODEL SEASONAL PERFORMANCE IN COOLING MODE									
①	Pdesignc (EN 14825)	kW	433,6	487,5	543,5	618,4	691,4	774,4	859,4	950,4
①	SEER (EN 14825)		6,58	6,46	6,43	6,39	6,39	6,54	6,45	6,39
②	$\eta_{s,c}$	%	260	255	254	253	252	259	255	253

	TCHVTL MODEL		21030	21100	21180	21250	21310	21390	21450
❶	Nominal cooling capacity	kW	1025,4	1098,3	1173,2	1250,2	1310,3	1391,2	1455,2
❶	E.E.R.		4,9	4,86	4,86	4,87	4,85	4,85	4,83
❶	Absorbed power	kW	209,3	226	241,4	256,7	270,2	286,8	301,3
❷	Sound power	dB(A)	99	99	99	99	99	100	100
	Screw compressors	no.	2	2	2	2	2	2	2
	Circuits	no.	2	2	2	2	2	2	2
	Electrical supply	V-ph-Hz	400-3-50	400-3-50	400-3-50	400-3-50	400-3-50	400-3-50	400-3-50
	DIMENSIONS AND WEIGHT		**21030**	**21100**	**21180**	**21250**	**21310**	**21390**	**21450**
	L - Width	mm	4850	4850	4850	5150	5160	5130	5140
	H - Height	mm	2130	2230	2230	2230	2250	2350	2350
	P - Depth	mm	1320	1320	1320	1320	1320	1320	1320
❸	TCHVTL weight	kg	4680	4830	4940	5030	5220	5590	5820

Data at the following conditions:
❶ Chilled water: 7/12°C. - Condenser inlet water: 30/35°C.
❷ Total sound power level in dB(A) based on measurements carried out in accordance with regulation UNI EN-ISO 9614.
❸ Empty weight.
Performance according to EN 14511.

	SEASONAL ENERGY PERFORMANCE		21030	21100	21180	21250	21310	21390	21450
	TCHVTL MODEL SEASONAL PERFORMANCE IN COOLING MODE								
①	Pdesignc (EN 14825)	kW	1025,4	1.098,3	1.173,2	1.250,2	1.310,3	1.391,2	1.455,2
①	SEER (EN 14825)		6,38	6,38	6,41	6,41	6,43	6,39	6,38
②	$\eta_{s,c}$	%	252	252	253	253	254	253	252

① Low temperature application (7°C)
② Seasonal energy efficiency: low temperature cooling (EU Regulation 2016/2281)

Y-Flow E

TCEEY 115÷240

Cooling capacity:
13,7÷36,9 kW

Cooling only condenserless units. Range with scroll hermetic compressors and R410A refrigerant gas.

KEY FEATURES

- **Efficient condenserless unit in R410A**

CONSTRUCTION FEATURES

- Compressor: hermetic rotary scroll complete with thermal protection and crankcase heater.
- Water side heat exchanger: adequately insulated stainless steel plates, complete with antifreeze heater and water flow differential pressure switch.
- Control: microprocessor electronic control, with Adaptive Function Plus logic.
- Structure: in galvanised and painted steel plate coated with polyester powder, internally lined with soundproof panelling.

MODELS

TCEEY: unit designed for cooling only.

FACTORY FITTED ACCESSORIES

- PUMP - Primary side (user): pump unit complete with electric circulation pump, membrane expansion tank, safety valve, water fill/drain valve, manual air vent valve, and pressure gauge.
  The electric pumps are available with low or high head.
- Soft start device.
- Silenced set up with double panelling in the compressor compartment.
- Digital input for double set-point.
- 4-20 mA analogue signal for shifting set-point.
- Refrigerant leak detector.
- Forced limit of power consumption.

SEPARATELY SUPPLIED ACCESSORIES

- Outdoor air temperature probe for set-point compensation.
- Water filter.
- Rubber anti-vibration mounts.
- Remote keypad with LCD display.
- Interfaces for serial communication with other devices.
- Serial converter (RS485/USB).

Features

	TCEEY MODEL		115	118	122	125	230	240
❶	Nominal cooling capacity	kW	13,7	16,4	20,1	23,3	26,8	36,9
❶	EER		3,26	4	3,65	3,76	3,12	3,69
❶	Absorbed power (*)	kW	4,2	4,1	5,5	6,2	8,6	10
❶	Available head of standard electric pump	kPa	89	80	73	114	107	113
❶	Available head of high head pump	kPa	164	146	163	152	129	135
❷	Sound power	dB(A)	58	58	62	63	64	67
❷	Silenced setup sound power	dB(A)	53	53	57	58	59	62
	Scroll/ step compressors	n.	1/1	1/1	1/1	1/1	2/2	2/2
	Circuits	n.	1	1	1	1	1	1
	Electrical supply	V-ph-Hz	400-3+N-50	400-3+N-50	400-3+N-50	400-3+N-50	400-3+N-50	400-3+N-50
	DIMENSIONS AND WEIGHTS		**115**	**118**	**122**	**125**	**230**	**240**
	L - Width	mm	700	700	700	700	700	700
	H - Height	mm	1140	1140	1140	1140	1140	1140
	P - Depth	mm	560	560	780	780	780	780
❸	Weight	kg	166	166	191	214	234	251

Data at the following conditions:
❶ Chilled water: 12/7°C - Condensing temperature: 50°C (dew point)
❷ Sound power level in dB(A) based on measurements carried out in accordance with regulation UNI EN ISO 9614
❸ Weight refers to the most complete setup
(*) Unit without electric pumps.

Web code 245÷2185: **YFC21**
Web code 4180÷4360: **YFC31**

Y-Flow E

TCEEBY 245÷4360

Cooling capacity:
39,8÷320,9 kW

KEY FEATURES

- **Built-in MASTER/ SLAVE control**

Cooling only condenserless units to couple with remote condensers.
Range with scroll hermetic compressors and R410A refrigerant gas.

CONSTRUCTION FEATURES

- Compressor: hermetic rotary scroll complete with thermal protection and crankcase heater.
- Water side heat exchanger: adequately insulated stainless steel plates, complete with antifreeze heater and water flow differential pressure switch.
- Control: microprocessor electronic control, with Adaptive Function Plus logic.
- Structure: made of galvanised and painted steel plate with polyester powder coating.
- The unit is also complete with:
- compressor circuit breaker switches;
- display of cooling circuit high and low pressure;
- Master/Slave control up to 4 units in parallel;
- clock board;
- 0-10V analogue signal for condensing control from external device.

MODELS

- TCEEBY: unit designed for cooling only.

FACTORY FITTED ACCESSORIES

- PUMP primary side (user): pump unit complete with single or double electric circulation pump, membrane expansion tank, safety valve, water fill/drain valve, manual air vent valve and pressure gauge. The electric pumps are available with low or high head.
- VPF control.
- Inverter pump control for unit start-up.
- Power factor correction capacitors (cosϕ > 0.94)
- Cooling circuit high and low pressure gauges.
- Power factor correction capacitors.
- Soft start device.
- Forced limit of power consumption.
- Energy parameter measuring device.
- Control of min/max power supply voltage.
- Double safety valves.
- Silenced set up.
- Interfaces for serial communication with other devices.
- Digital input for double set-point.
- 4-20 mA analogue signal for shifting set-point.
- Rubber anti-vibration mounts (or spring-operated for models 4180-4360) supplied unassembled.

SEPARATELY SUPPLIED ACCESSORIES

- Outdoor air temperature probe for set-point compensation.
- Water filter.
- Rubber anti-vibration mounts.
- Clock board.
- Remote keypad with display.
- Serial converter (RS485/USB).

Features

COOL · SCROLL COMPRESSOR · GAS R410A · INDOOR · ADAPTIVE FUNCTION PLUS

	TCEEBY MODEL		245	250	260	270	275	290	2100	2115	2130	2145	2165	2185
❶	Nominal cooling capacity	kW	39,8	47,3	53,6	61,3	67,9	80,6	91,7	103,4	115	128,2	145,7	162,3
❶	EER		3,29	3,38	3,3	3,76	3,39	3,49	3,38	3,34	3,29	3,34	3,26	3,19
❶	Absorbed power (*)	kW	12,1	14	16,2	18,2	20	23,1	27,1	31	35	38,4	44,7	50,8
❶	Available head of standard electric pump	kPa	116	108	134	94	84	86	117	119	133	117	119	106
❶	Available head of high head pump	kPa	182	187	171	185	177	180	169	178	190	176	177	172
❷	Sound power	dB(A)	67	67	68	68	69	70	71	72	73	74	74	75
❷	Silenced setup sound power	dB(A)	63	63	64	64	65	66	67	68	69	70	70	71
	Scroll/ step compressors	n.	2/2	2/2	2/2	2/2	2/2	2/2	2/2	2/2	2/2	2/2	2/2	2/2
	Circuits	n.	1	1	1	1	1	1	1	1	1	1	1	1
	Electrical supply	V-ph-Hz	400-3+N-50											
	DIMENSIONS AND WEIGHTS		**245**	**250**	**260**	**270**	**275**	**290**	**2100**	**2115**	**2130**	**2145**	**2165**	**2185**
	L - Width	mm	1020	1020	1020	1020	1020	1020	1270	1270	1270	1270	1270	1270
	W - Width (PUMP setup)	mm	1250	1250	1250	1250	1250	1250	1500	1500	1500	1500	1500	1500
	H - Height	mm	1470	1470	1470	1470	1470	1470	1620	1620	1620	1620	1620	1620
	P - Depth	mm	870	870	870	870	870	870	870	870	870	870	870	870
❸	Weight	kg	380	390	390	400	400	420	660	670	690	710	720	720

	TCEEBY MODEL		4180	4205	4235	4260	4290	4330	4360
❶	Nominal cooling capacity	kW	161,2	182,9	205	229,4	253,8	287,4	320,9
❶	EER		3,53	3,5	3,48	3,49	3,5	3,42	3,36
❶	Absorbed power (*)	kW	45,7	52,3	58,9	65,8	72,6	84	95,5
❶	Available head of standard electric pump	kPa	140	132	114	117	111	136	168
❶	Available head of high head pump	kPa	195	200	196	240	273	241	257
❷	Sound power	dB(A)	77	77	78	79	80	81	82
❷	Silenced setup sound power	dB(A)	75	75	76	77	78	79	80
	Scroll/ step compressors	n.	4/4	4/4	4/4	4/4	4/4	4/4	4/4
	Circuits	n.	2	2	2	2	2	2	2
	Electrical supply	V-ph-Hz	400-3-50	400-3-50	400-3-50	400-3-50	400-3-50	400-3-50	400-3-50
	DIMENSIONS AND WEIGHTS		**4180**	**4205**	**4235**	**4260**	**4290**	**4330**	**4360**
	L - Width	mm	2600	2600	2600	2600	2600	2600	2600
	W - Width (PUMP setup)	mm	3734	3734	3734	3734	3734	3734	3734
	H - Height	mm	1860	1860	1860	1860	1860	1860	1860
	P - Depth	mm	870	870	870	870	870	870	870
❸	Weight	kg	1310	1370	1390	1410	1440	1460	1490

Data at the following conditions:
❶ Chilled water: 12/7°C - Condensing temperature: 50°C (dew point)
❷ Sound power level in dB(A) based on measurements carried out in accordance with regulation UNI EN ISO 9614
❸ Weight referred to the unit without load and not accessorised.
(*) Unit without electric pumps.

	Recommended combinations with CCAMY condensers for TCEEBY models 4180-4360								
	TCEEBY MODEL		**4180**	**4205**	**4235**	**4260**	**4290**	**4330**	**4360**
	CCAMY MODEL	**Circuit 1**	**CCAMY 290**	**CCAMY 2110**	**CCAMY 2115**	**CCAMY 2130**	**CCAMY 2145**	**CCAMY 2165**	**CCAMY 2185**
		Circuit 2	**CCAMY 290**	**CCAMY 2110**	**CCAMY 2115**	**CCAMY 2130**	**CCAMY 2145**	**CCAMY 2165**	**CCAMY 2185**

	SEASONAL ENERGY PERFORMANCE		**4180**	**4205**	**4235**	**4260**	**4290**	**4330**	**4360**
	TCEEBY + CCAMBY MODEL SEASONAL PERFORMANCE IN COOLING MODE								
①	Pdesignc (EN 14825)	kW	160,6	182,2	204,2	228,5	252,9	286,3	319,7
①	SEER (EN 14825)		4,19	4,22	4,24	4,25	4,26	4,27	4,22
②	$\eta_{s,c}$	%	165	166	167	167	167	168	166
	TCEEBY + CCAMSY MODEL SEASONAL PERFORMANCE IN COOLING MODE								
①	Pdesignc (EN 14825)	kW	160,6	182,2	204,2	228,5	252,9	286,3	319,7
①	SEER (EN 14825)		4,18	4,21	4,23	4,22	4,24	4,24	4,2
②	$\eta_{s,c}$	%	164	165	166	166	167	167	165
	TCEEBY + CCAMQY MODEL SEASONAL PERFORMANCE IN COOLING MODE								
①	Pdesignc (EN 14825)	kW	160,6	182,2	204,2	228,5	252,9	286,3	319,7
①	SEER (EN 14825)		4,14	4,18	4,19	4,2	4,23	4,22	4,19
②	$\eta_{s,c}$	%	163	164	165	165	166	166	165

① Low temperature application (7°C)
② Seasonal energy efficiency: low temperature cooling (EU Regulation 2016/2281)

Z-Flow E

TCEVZ 1200÷31630

Cooling capacity:
171,9÷1.424,8 kW

TCEVBZ 2630

Cooling only condenserless units.
Range with semi-hermetic screw compressors and R134a refrigerant gas.

KEY FEATURES

- **Efficient condenserless unit in R134a**
- **33 sizes in standard and soundproofed versions**
- **Wide range of standard equipment**
- **Integrated MASTER/SLAVE control**

CONSTRUCTION FEATURES

- Compressor: high energy efficiency semi-hermetic screw compressor, with star-delta or part-winding start up (depending on models) and complete with integral protection, casing heater and refrigerant gas outlet piping shut-off valve.
- Electronic expansion valve: as standard on all models.
- Water side heat exchanger (evaporator): dry expansion shell and tube exchanger with counterflow heat exchange, complete with closed cell polyurethane foam rubber insulation, water flow differential pressure switch and Victaulic fittings.
- Control: microprocessor electronic control.
- Structure: made of galvanised and painted steel plate with polyester powder coating.
- The unit is also complete with:
  - clock board;
  - display of cooling circuit high/low pressure;
  - Master/Slave control up to 4 units in parallel.

VERSIONS

- B -Standard version (TCEVBZ).
- I -Soundproofed version with soundproofing compressor lining (TCEVIZ).Models
- TCEVBZ: unit designed for cooling only.
- TCEVIZ: soundproofed unit designed for cooling only.

FACTORY FITTED ACCESSORIES

- VPF control.
- Power factor correction capacitors (cosϕ > 0.94).
- Circuit breaker switches.
- Forced limit of power consumption.
- Soft starter.
- Inlet compressor shut-off valves
- Linear capacity control compressors (50-100 % for each compressor).
- Evaporator antifreeze heater.
- Digital input for double set-point.
- Compressor oil level sensor.
- Control of min/max power supply voltage.
- 4-20 mA analogue signal for shifting set-point.
- Interfaces for serial communication with other devices.
- Spring anti-vibration mounts.
- Rubber anti-vibration mounts.

SEPARATELY SUPPLIED ACCESSORIES

- Remote keypad with display.
- Rhoss supervisors for unit monitoring and remote management.
- Rhoss sequencer for integrated management of multiple chillers.

Features

COOL · SCREW COMPRESSOR · GAS R134a · INDOOR

	TCEVBZ-TCEVIZ MODEL		1200	1230	1280	1310	1350	1410	1460	1530	1590
❶	Nominal cooling capacity	kW	171,9	190,8	238,1	260,4	300,6	346,2	399,7	446,4	508,9
❶	E.E.R.		3,4	3,28	3,3	3,3	3,41	3,3	3,3	3,3	3,4
❶	Absorbed power	kW	50,5	58,1	72,2	79	88,1	104	122,2	135,3	149,7
❷	Sound power	dB(A)	94	94	97	97	97	97	97	98	98
❷	Sound power	dB(A)	92	92	95	95	95	95	95	96	96
	Screw compressors/steps	n.	1/3	1/3	1/3	1/3	1/3	1/3	1/3	1/3	1/3
	Circuits	n.	1	1	1	1	1	1	1	1	1
	Electrical supply	V-ph-Hz	400-3-50	400-3-50	400-3-50	400-3-50	400-3-50	400-3-50	400-3-50	400-3-50	400-3-50
	TCEVBZ DIMENSIONS AND WEIGHTS		**1200**	**1230**	**1280**	**1310**	**1350**	**1410**	**1460**	**1530**	**1590**
	L - Width	mm	3470	3450	3450	3450	3500	3500	3480	3490	3500
	H - Height	mm	1580	1580	1580	1580	1660	1660	1660	1760	1760
	P - Depth	mm	1000	1000	1000	1000	1000	1000	1000	1000	1000
❸	TCEVBZ Weight	kg	1078	1093	1410	1414	1557	2032	2038	2252	2281
❸	TCEVIZ Weight	kg	1333	1348	1665	1669	1812	2287	2293	2507	2536

	TCEVBZ-TCEVIZ MODEL		2400	2420	2440	2510	2560	2600	2630	2680	2710
❶	Nominal cooling capacity	kW	335,8	356,6	372,1	431,9	473,4	506,4	529,3	581,4	614,1
❶	E.E.R.		3,33	3,29	3,22	3,31	3,28	3,34	3,34	3,46	3,48
❶	Absorbed power	kW	100,7	108,3	115,7	130,6	144,4	151,5	158,4	168	176,6
❷	Sound power	dB(A)	97	97	97	99	99	99	99	99	99
❷	Sound power	dB(A)	95	95	95	97	97	97	97	97	97
	Screw compressors/steps	n.	2/6	2/6	2/6	2/6	2/6	2/6	2/6	2/6	2/6
	Circuits	n.	2	2	2	2	2	2	2	2	2
	Electrical supply	V-ph-Hz	400-3-50	400-3-50	400-3-50	400-3-50	400-3-50	400-3-50	400-3-50	400-3-50	400-3-50
	TCEVBZ DIMENSIONS AND WEIGHTS		**2400**	**2420**	**2440**	**2510**	**2560**	**2600**	**2630**	**2680**	**2710**
	L - Width	mm	3780	3830	3850	4040	4040	4040	4040	4040	4040
	H - Height	mm	1420	1420	1420	1610	1610	1610	1610	1610	1610
	P - Depth	mm	1300	1300	1300	1300	1300	1300	1300	1300	1300
❸	TCEVBZ Weight	kg	1797	1811	1819	2311	2629	2637	2638	2698	2733
❸	TCEVIZ Weight	kg	2227	2241	2249	2741	3059	3067	3068	3128	3163

	TCEVBZ-TCEVIZ MODEL		2750	2790	2880	2930	21030	21110	21180	21260
❶	Nominal cooling capacity	kW	647,8	681,6	753,9	801,4	896,1	959,4	1.027,80	1.101,50
❶	E.E.R.		3,37	3,28	3,33	3,28	3,47	3,54	3,6	3,68
❶	Absorbed power	kW	192,1	207,6	226,5	244,4	257,9	271	285,5	299,4
❷	Sound power	dB(A)	99	99	99	99	99	99	99	99
❷	Sound power	dB(A)	97	97	97	97	97	97	97	97
	Screw compressors/steps	n.	2/6	2/6	2/6	2/6	2/6	2/6	2/6	2/6
	Circuits	n.	2	2	2	2	2	2	2	2
	Electrical supply	V-ph-Hz	400-3-50	400-3-50	400-3-50	400-3-50	400-3-50	400-3-50	400-3-50	400-3-50
	TCEVBZ DIMENSIONS AND WEIGHTS		**2750**	**2790**	**2880**	**2930**	**21030**	**21110**	**21180**	**21260**
	L - Width	mm	4120	4000	4000	4000	4000	4000	4000	4000
	H - Height	mm	1610	1480	1560	1560	1600	1600	1600	1600
	P - Depth	mm	1300	1300	1300	1300	1300	1300	1300	1300
❸	TCEVBZ Weight	kg	3176	3631	3844	3859	3936	3993	4024	4044
❸	TCEVIZ Weight	kg	3606	4061	4272	4289	4366	4423	4454	4474

	TCEVBZ-TCEVIZ MODEL		31300	31350	31390	31460	31520	31590	31630
❶	Nominal cooling capacity	kW	1.129,60	1.178,30	1.227,00	1.287,50	1.340,10	1.388,50	1.424,80
❶	E.E.R.		3,6	3,55	3,51	3,51	3,52	3,53	3,51
❶	Absorbed power	kW	314,1	331,8	349,5	367,1	380,4	393,4	406,4
❷	Sound power	dB(A)	101	101	101	102	102	102	102
❷	Sound power	dB(A)	99	99	99	100	100	100	100
	Screw compressors/steps	n.	3/9	3/9	3/9	3/9	3/9	3/9	3/9
	Circuits	n.	3	3	3	3	3	3	3
	Electrical supply	V-ph-Hz	400-3-50	400-3-50	400-3-50	400-3-50	400-3-50	400-3-50	400-3-50
	TCEVBZ DIMENSIONS AND WEIGHTS		**31300**	**31350**	**31390**	**31460**	**31520**	**31590**	**31630**
	L - Width	mm	4940	4940	4940	4940	4940	4940	4940
	H - Height	mm	1580	1580	1580	1580	1620	1620	1620
	P - Depth	mm	2100	2100	2100	2100	2100	2100	2100
❸	TCEVBZ Weight	kg	5555	5570	5585	5600	5678	5710	5790
❸	TCEVIZ Weight	kg	6155	6170	6185	6200	6278	6310	6390

Data at the following conditions:

❶ Chilled water: 12/7°C - Condensing temperature: 50°C (dew point).

❷ Total sound power level in dB(A) based on measurements carried out in accordance with regulation UNI EN-ISO 9614.

❸ Weight without load refers to fully accessorised unit.

TCEVIZ soundproofed version.

EXP - Multi-purpose systems

EXP - Multi-purpose systems

Air-cooled - Axial fans | Inverter scroll

EasyPACK-I EXP 140
TXAIY 270÷2130

Air-cooled - Axial fans | Ermetici scroll

Compact-Y EXP MD 142
TXAEY 133÷265

EasyPACK ECO EXP 144
TXAEU 270-2135

WinPACK ECO EXP 146
TXAEU 4140÷4330

WinPACK EXP 148
TXAEY 4150÷4340

WinPOWER ECO EXP 150
TXAEU 4370÷6660

WinPOWER EXP 152
TXAEY 4400÷6660

Water-cooled | Ermetici scroll

Comby-Flow EXP 154
TXHEY 105÷112

Y-Flow EXP 156
TXHEY 245÷4410

EasyPACK-I EXP

TXAIY 270÷2130

Cooling capacity:
64,4÷125,9 kW

Heating capacity:
71÷133,2 kW

TXAITY 2130 with coil protection metal filters accessory

TXAITY 2100 with coil protection metal filters accessory

KEY FEATURES

- **Multi-purpose units with inverter compressors**
- **TER up to 7.62**
- **Extended operating limits**
- **Units for systems with 2, 4 and 6 pipes**
- **Integrated MASTER/SLAVE control**

EXPsystems - Air cooled multi-purpose ecological system with axial fans.
Range with scroll hermetic compressors, DC Inverter and R410A refrigerant gas.

CONSTRUCTION FEATURES

- Compressor: scroll type, rotary, hermetic and with Inverter actuation (1+i) complete with thermal protection and casing heater.
- Continuous regulation with high efficiency at partial loads.
- Main and secondary heat exchangers: crossed flow stainless steel plate exchangers, complete with antifreeze heater, closed cell polyurethane foam rubber insulation and water flow differential pressure switch.
- Air side heat exchanger: finned coil with copper pipes and aluminium fins.
- Fan: external rotor axial type electric fans equipped with internal thermal protection and accident protection grilles. The electric fans, based on the sizes, are EC fans or fitted with a proportional electronic device for continuous regulation of the rotation speed.
- Control: microprocessor electronic control with Adaptive Function Plus logic.
- Structure: made of galvanised and painted steel plate with polyester powder coating.
- The unit is also complete with:
  - compressor and fan circuit breaker switches;
  - electronic expansion valve;
  - display of cooling circuit high/low pressure;
  - master/slave control up to 4 units in parallel;
  - clock board;
  - control of Variable Primary Flow (VPF_R).

VERSIONS

- T - High efficiency version.
- Q - Super silenced version complete with compressor technical compartment soundproofing and reduced speed fans.

MODELS

- TXAITY: EXPsystems unit.
- • TXAIQY: super silenced EXPsystems unit.

FACTORY FITTED ACCESSORIES

- PUMP with single or double electric pump, one of which automatic in standby. The electric pumps are available in the low or high head versions.
- TANK&PUMP with 230 - 440 litre integrated buffer tank (depending on the sizes) and single or double electric pump, complete with expansion tank, air vent valves, safety valve and water side pressure gauge.
- Inverter pump control for unit start-up.
- Desuperheater.
- Condensing control with fans with EC motor (standard in sizes 270-2100).
- Condensing control with over-pressure fans (T version only)
- Power factor correction capacitors (cosϕ > 0.94).
- Forced limit of power consumption.
- Forced noise limit.
- Energy parameter measuring device.
- Optimised energy efficiency.
- Soft starter.
- Technical compressor compartment soundproofing.
- Compressor soundproof enclosures.
- Cooling circuit outlet and inlet valves.
- Refrigerant leak detector.
- Cooling circuit high and low pressure gauges.
- Double safety valves.
- Metal filters or coil protection nets.
- Copper/copper or copper/pre-painted aluminium coils.
- Control of min/max power supply voltage.
- Digital input for double set-point.
- 4-20 mA analogue signal for shifting set-point.
- Electrical panel heater, buffer tank, electric pumps and heat exchangers for heat recovery, if applicable.
- Interfaces for serial communication with other devices.
- Rubber anti-vibration mounts.

SEPARATELY SUPPLIED ACCESSORIES

- Remote keypad with display.
- Thermostat with display.
- Rhoss supervisors for unit monitoring and remote management.
- Rhoss sequencer for integrated management of multiple chillers.

Features

EXP SYSTEMS · SCROLL COMPRESSOR · INVERTER · GAS R410A · OUTDOOR · ADAPTIVE FUNCTION PLUS · EUROVENT CERTIFIED PERFORMANCE www.eurovent-certification.com

	TXAITY MODEL		270	280	290	2100	2115	2130
	COOLING OPERATIONS (AUTOMATIC 1 MODE)							
❶	Nominal cooling capacity	kW	66,6	78,8	86,2	93	112,3	125,9
❶	Absorbed power	kW	22,2	26,53	29,02	32,52	37,81	42,11
❶	E.E.R.		3	2,97	2,97	2,86	2,97	2,99
	COOLING OPERATIONS + TOTAL RECOVERY (AUTOMATIC 2 MODE)							
❸	Nominal cooling capacity	kW	68,5	84,3	87	96,1	114,9	128,1
❸	Recovery heating capacity	kW	88,4	109,1	112,4	124,3	148,4	164,6
❸	T.E.R.		7,53	7,43	7,52	7,47	7,49	7,62
	HEATING OPERATIONS (MODE SELECT 1-2 AUTOMATIC 3)							
❷	Nominal heating capacity	kW	72,8	85,1	92,2	100,2	120,3	133,2
❷	Absorbed power	kW	21,89	25,63	27,52	30,09	36,23	41,11
❷	C.O.P.		3,33	3,32	3,35	3,33	3,32	3,24
	TXAIQY MODEL		**270**	**280**	**290**	**2100**	**2115**	**2130**
	COOLING OPERATIONS (AUTOMATIC 1 MODE)							
❶	Nominal cooling capacity	kW	64,4	77,2	83,7	89,4	107,9	122,2
❶	Absorbed power	kW	22,92	27,18	29,68	33,48	38,54	42,88
❶	E.E.R.		2,81	2,84	2,82	2,67	2,8	2,85
	COOLING OPERATIONS + TOTAL RECOVERY (AUTOMATIC 2 MODE)							
❸	Nominal cooling capacity	kW	68,5	84,3	87	96,1	114,9	128,1
❸	Recovery heating capacity	kW	88,4	109,1	112,4	124,3	148,4	164,6
❸	T.E.R.		7,53	7,43	7,52	7,47	7,49	7,62
	HEATING OPERATIONS (MODE SELECT 1-2 AUTOMATIC 3)							
❷	Nominal heating capacity	kW	71	83,2	90,3	98,4	117,2	130,5
❷	Absorbed power	kW	21,52	25,14	27,28	29,82	36,06	40,78
❷	C.O.P.		3,3	3,31	3,31	3,3	3,25	3,2
	TXAITY-TXAIQY MODEL		**270**	**280**	**290**	**2100**	**2115**	**2130**
❹	TXAITY sound pressure	dB(A)	52	53	53	53	56	56
❹	TXAIQY sound pressure	dB(A)	45	46	46	46	50	50
❺	TXAITY sound power	dB(A)	84	85	85	85	88	88
❺	TXAIQY sound power	dB(A)	77	77,5	77,5	77,5	82	82
	Scroll compressors	n.			1 inverter + 1			
	Circuits	n.	2	2	2	2	2	2
	Electrical supply	V-ph-Hz	400-3+N-50	400-3+N-50	400-3+N-50	400-3+N-50	400-3+N-50	400-3+N-50
	DIMENSIONS AND WEIGHTS		**270**	**280**	**290**	**2100**	**2115**	**2130**
	L - Width	mm	3250	3250	3250	3250	3450	3450
	H - Height	mm	1540	1540	1540	1540	2000	2000
	P - Depth	mm	1210	1210	1210	1210	1520	1520
❻	TXAITY weight	kg	1060	1085	1095	1105	1435	1455
❻	TXAIQY weight	kg	1095	1120	1130	1140	1485	1505

Data at the following conditions:
❶ Air: 35°C - Water: 12/7°C.
❷ Air: 7°C D.B. - 6°C W.B. - Water: 40/45°C.
❸ Evaporator water: 12/7°C. Recovery output water 45°C - Nominal flow rate.
❹ In open field (Q = 2) at 10 m from the unit.
❺ Total sound power level in dB(A) based on measurements carried out in accordance with regulation UNI EN-ISO 9614.
❻ Weight referred to the unit without load and not accessorised.
Performance according to EN 14511.
T.E.R.: Total efficiency ratio

	SEASONAL ENERGY PERFORMANCE		270	280	290	2100	2115	2130
	TXAITY MODEL SEASONAL PERFORMANCE IN HEATING MODE							
③	Pdesignh (EN 14825)	kW	56	68	70	94	113	125
③	SCOP (EN 14825)		3,96	4,02	4,02	3,99	3,99	3,88
④	η_s	%	155	158	158	157	157	152
④	Energy class		A++	A++	A++			
	TXAIQY MODEL SEASONAL PERFORMANCE IN HEATING MODE							
③	Pdesignh (EN 14825)	kW	54	64	68	92	109	122
③	SCOP (EN 14825)		4,06	4,13	4,08	3,93	3,9	3,84
④	η_s	%	159	162	160	154	153	151
④	Energy class		A++	A++	A++			

③ In Average climatic conditions, low temperature application (35°C)
④ Seasonal energy efficiency: low temperature heating in Average climate (EU Regulations No.811/2013 and No.813/2013)

Compact-Y EXP MD

TXAEY 133÷265

Cooling capacity:
33,8÷61,6 kW

Heating capacity:
39,4÷68,3 kW

EXPsystems - Air cooled multi-purpose ecological system with axial fans.
Range with scroll hermetic compressors and R410A refrigerant gas.

CONSTRUCTION FEATURES

- Compressor: scroll type, rotary, hermetic complete with thermal protection and casing heater.
- Main and secondary heat exchangers: suitably insulated stainless steel plates, complete with antifreeze heater and water flow differential pressure switch.
- Air side heat exchanger: featuring finned coil with copper pipes and aluminium fins, complete with protection grille.
- Fan: external rotor axial type electric fans equipped with internal thermal protection, accident protection grilles and proportional electronic device for continuous fan rotation speed regulation.
- Control: microprocessor electronic control with AdaptiveFunction logic.
- Structure: made of galvanised and painted steel plate.
- The unit is also complete with:
  - display of cooling circuit high and low pressure;
  - Master/Slave control up to 4 units in parallel;
  - clock board.

MODELS

- TXAEY: EXPsystems base unit.

FACTORY FITTED ACCESSORIES

- PUMP (only for main circuit) with single or double electric pump, including an automatic pump in standby (mod. 260-265) complete with expansion tank, air vent valves, safety valve and water side pressure gauge. The electric pumps are available in the low or high pressure head versions.
- TANK&PUMP (only for main circuit) with inertial buffer tank and single or double electric pump, including an automatic pump in standby (mod. 260-265), complete with expansion tank, air vent valves, safety valve and water side pressure gauge. The electric pumps are available in the low or high pressure head versions.
- Condensing control with fans with EC motor.
- Silenced set up.
- Cooling circuit high and low pressure gauges.
- Antifreeze heater for buffer tank and electric pumps.
- Forced limit of power consumption.
- Digital input for double set-point
- 4-20mA analogue signal for shifting set-point.
- Pre-painted copper/coils or copper/copper coils.

SEPARATELY SUPPLIED ACCESSORIES

- Rubber anti-vibration mounts.
- Water filter.
- Remote keypad with display.
- Interfaces for serial communication with other devices.
- Serial converter (RS485/USB).
- Rhoss supervisors for unit monitoring and remote management.

Features

	TXAEY MODEL		133	260	265
	COOLING OPERATIONS (AUTOMATIC 1 MODE)				
❶	Nominal cooling capacity	kW	33,8	57,9	61,6
❶	Absorbed power	kW	13,5	21,9	24,4
❶	E.E.R.		2,5	2,64	2,54
	COOLING OPERATIONS + TOTAL RECOVERY (AUTOMATIC 2 MODE)				
❸	Nominal cooling capacity	kW	32,8	54,9	62,4
❸	Recovery heating capacity	kW	44,5	72,2	81,5
❸	T.E.R.		6,57	7,28	7,42
	HEATING OPERATIONS (MODE SELECT 1-2 AUTOMATIC 3)				
❷	Nominal heating capacity	kW	39,4	62,5	68,3
❷	Absorbed power	kW	13,6	20,9	23,7
❷	C.O.P.		2,9	3	2,88
	TXAEY MODEL				
❹	Sound pressure	dB(A)	54	57	57
❹	Silenced setup sound pressure	dB(A)	51	54	54
	Scroll compressors/steps	n.	1/1	2/2	2/2
	Circuits	n.	1	1	1
	Electrical supply	V-ph-Hz	400-3+N-50	400-3+N-50	400-3+N-50
	DIMENSIONS AND WEIGHTS		**133**	**260**	**265**
	L - Width	mm	1710	2315	2315
	H - Height	mm	1570	1570	1570
	P - Depth	mm	1000	1000	1000
❺	TXAEY weight	kg	505	810	845

Data at the following conditions:
❶ Air: 35°C - Water: 12/7°C.
❷ Air: 7°C D.B. - 6°C W.B. - Water: 40/45°C.
❸ Evaporator water: 12/7°C. 40/45°C recovery water.
❹ In open field (Q = 2) at 5 m from the unit.
❺ Weight refers to the most complete setup.
Performance according to EN 14511.
T.E.R.: Total efficiency ratio

	SEASONAL ENERGY PERFORMANCE		133	260	265
	TXAEY MODEL SEASONAL PERFORMANCE IN HEATING MODE				
③	Pdesignh (EN 14825)	kW	39	62	68
③	SCOP (EN 14825)		3,28	3,79	3,73
④	η_s	%	128	149	146
④	Energy class		A+	A+	A+

③ In Average climatic conditions, low temperature application (35°C)
④ Seasonal energy efficiency: low temperature heating in Average climate (EU Regulations No.811/2013 and No.813/2013)

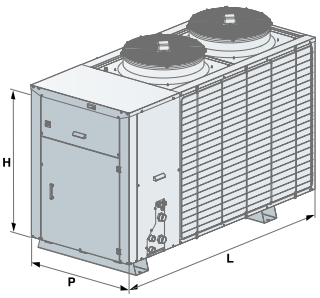

NEW Web code: **EAX05**

EasyPACK ECO EXP

TXAEU 270-2135

Cooling capacity: 67,2÷133,8 kW

Heating capacity: 71,0÷136,9 kW

TXAETU 2135

KEY FEATURES

- **Efficient and eco-friendly range in R454B**
- **Temperature of the produced water up to 60°C**
- **TER up to 7,73**
- **Extended operating limits**
- **Integrated MASTER/SLAVE control**

EXPsystems - Air cooled multi-purpose ecological system with axial fans. Range with scroll hermetic compressors and R454B refrigerant gas.

CONSTRUCTION FEATURES

- Compressor: scroll type, rotary, hermetic complete with thermal protection and casing heater.
- 2 capacity steps with high efficiency at part loads.
- Main and secondary heat exchangers: crossed flow stainless steel plate exchangers, complete with antifreeze heater, closed cell polyurethane foam rubber insulation and water flow differential pressure switch.
- Air side heat exchanger: finned coil with copper pipes and aluminium fins.
- Fan: external rotor axial type electric fans equipped with internal thermal protection and accident protection grilles. The electric fans, based on the sizes, are EC fans or fitted with a proportional electronic device for continuous adjustment of the rotation speed.
- Control: microprocessor electronic control with Adaptive Function Plus logic.
- Structure: made of galvanised and painted steel plate with polyester powder coating.
- The unit is also complete with:
  - compressor and fan circuit breaker switches;
  - electronic expansion valve;
  - display of cooling circuit high/low pressure;
  - master/slave control up to 4 units in parallel;
  - clock board;
  - control of Variable Primary Flow (VPF_R).

VERSIONS

- T - High efficiency version.
- Q - Super silenced version complete with compressor technical compartment soundproofing and reduced speed fans.

MODELS

- TXAETU: EXPsystems unit.
- TXAEQU: super silenced EXPsystems unit.

FACTORY FITTED ACCESSORIES

- PUMP with single or double electric pump, one of which automatic in standby. The electric pumps are available in the low or high head versions.
- TANK&PUMP with 230 - 440 litre integrated buffer tank (depending on the sizes) and single or double electric pump, complete with expansion tank, air vent valves, safety valve and water side pressure gauge.
- Inverter pump control for unit start-up.
- Desuperheater.
- Condensing control with fans with EC motor (standard in sizes 270-295).
- Condensing control with over-pressure fans (T version only)
- Power factor correction capacitors (cosϕ > 0.94).
- Forced limit of power consumption.
- Forced noise limit.
- Energy parameter measuring device.
- Soft starter.
- Compressor technical compartment soundproofing.
- Compressor soundproof enclosures.
- Cooling circuit delivery valves.
- Refrigerant leak detector.
- Gas control and refrigerant leak detector (leak detector plus).
- Cooling circuit high and low pressure gauges.
- Double safety valves.
- Metal filters or coil protection nets.
- Copper/copper or copper/pre-painted aluminium coils.
- Control of min/max power supply voltage.
- Digital input for double set-point.
- 4-20 mA analogue signal for shifting set-point.
- Electrical panel resistance, base, buffer tank and electric pumps if any.
- Interfaces for serial communication with other devices.
- Colour touch user keypad (fitted on the machine or remotely) with 7" display.
- Rubber anti-vibration mounts.

SEPARATELY SUPPLIED ACCESSORIES

- Remote keypad with display.
- Thermostat with display.
- Rhoss supervisors for unit monitoring and remote management.
- Rhoss sequencer for integrated management of multiple chillers.

Features

	TXAETU MODEL		270	285	295	2110	2125	2135
	COOLING OPERATIONS (AUTOMATIC 1 MODE)							
❶	Nominal cooling capacity	kW	69	83,6	97,8	110,8	124,6	133,8
❶	Absorbed power	kW	22,1	27,2	33,5	37,3	43,1	46,9
❶	E.E.R.		3,12	3,07	2,92	2,97	2,89	2,85
	COOLING OPERATIONS + TOTAL RECOVERY (AUTOMATIC 2 MODE)							
❸	Nominal cooling capacity	kW	69,9	84,4	97,3	111	123,9	134,3
❸	Recovery heating capacity	kW	89,8	108,7	125,7	143,8	160	174,1
❸	T.E.R.		7,73	7,67	7,55	7,46	7,57	7,45
	HEATING OPERATIONS (MODE SELECT 1-2 AUTOMATIC 3)							
❷	Nominal heating capacity	kW	73,4	88,2	101,2	116,9	127,5	136,9
❷	Absorbed power	kW	22	26,6	30,8	35,9	39,6	42,8
❷	C.O.P.		3,33	3,32	3,29	3,26	3,22	3,2
	TXAEQU MODEL		270	285	295	2110	2125	2135
	COOLING OPERATIONS (AUTOMATIC 1 MODE)							
❶	Nominal cooling capacity	kW	67,2	81,3	95,1	107	120,3	129,9
❶	Absorbed power	kW	22,6	27,7	34	38,2	44,1	48,1
❶	E.E.R.		2,97	2,93	2,8	2,8	2,73	2,7
	COOLING OPERATIONS + TOTAL RECOVERY (AUTOMATIC 2 MODE)							
❸	Nominal cooling capacity	kW	69,9	84,4	97,3	111	123,9	134,3
❸	Recovery heating capacity	kW	89,8	108,7	125,7	143,8	160	174,1
❸	T.E.R.		7,73	7,67	7,55	7,46	7,57	7,45
	HEATING OPERATIONS (MODE SELECT 1-2 AUTOMATIC 3)							
❷	Nominal heating capacity	kW	71	84,3	97	113,1	124,6	133,9
❷	Absorbed power	kW	21,1	25,1	29,2	34,5	38,6	41,7
❷	C.O.P.		3,36	3,36	3,32	3,28	3,23	3,21
	TXAETU-TXAEQU MODEL		**270**	**285**	**295**	**2110**	**2125**	**2135**
❹	TXAETU sound pressure	dB(A)	50	51	52	55	56	56
❹	TXAEQU sound pressure	dB(A)	44	45	46	49	50	50
❺	TXAETU sound power	dB(A)	82	83	84	87	88	88
❺	TXAEQU sound power	dB(A)	76	77	78	81	82	82
	Scroll compressors/steps	no.	2/2	2/2	2/2	2/2	2/2	2/2
	Circuits	no.	2	2	2	2	2	2
	Electrical supply	V-ph-Hz	400-3+N-50	400-3+N-50	400-3+N-50	400-3+N-50	400-3+N-50	400-3+N-50
	DIMENSIONS AND WEIGHTS		**270**	**285**	**295**	**2110**	**2125**	**2135**
	L - Width	mm	3560	3560	3560	3450	3450	3450
	H - Height	mm	1540	1540	1540	2000	2000	2000
	P - Depth	mm	1210	1210	1210	1520	1520	1520
❻	TXAETU weight	kg	1170	1210	1260	1510	1550	1565
❻	TXAEQU weight	kg	1205	1245	1295	1560	1600	1615

Data at the following conditions:
❶ Air: 35°C - Water: 12/7°C.
❷ Air: 7°C D.B. - 6°C W.B. - Water: 40/45°C.
❸ Evaporator water: 12/7°C. Recovery output water 45°C - Nominal flow rate.
❹ In open field (Q = 2) at 10 m from the unit.
❺ Total sound power level in dB(A) based on measurements carried out in accordance with regulation UNI EN-ISO 9614.
❻ Weight referred to the unit without load and not accessorised.
Performance according to EN 14511.
T.E.R.: Total efficiency ratio

	SEASONAL ENERGY PERFORMANCE		270	285	295	2110	2125	2135
	TXAETU MODEL SEASONAL PERFORMANCE IN HEATING MODE							
③	Pdesignh (EN 14825)	kW	68	83	95	110	120	129
③	SCOP (EN 14825)		3,71	3,69	3,65	3,63	3,62	3,62
④	η_s	%	146	145	143	142	142	142
④	Energy class		A+	-	-	-	-	-
	TXAEQU MODEL SEASONAL PERFORMANCE IN HEATING MODE							
③	Pdesignh (EN 14825)	kW	66	79	91	106	117	126
③	SCOP (EN 14825)		3,72	3,7	3,66	3,65	3,64	3,64
④	η_s	%	146	145	143	143	143	143
④	Energy class		A+	-	-	-	-	-

③ In Average climatic conditions, low temperature application (35°C)
④ Seasonal energy efficiency: low temperature heating in Average climate (EU Regulations No.811/2013 and No.813/2013)

WinPACK ECO EXP

TXAEU 4140÷4330

Cooling capacity:
135,7÷333,6 kW

Heating capacity:
144,3÷351,4 kW

KEY FEATURES

- **Multi-purpose units with TER up to 7.85**
- **R454B refrigerant gas**
- **Integrated MASTER/SLAVE control**

EXPsystems - Air cooled multi-purpose ecological system with axial fans.
Range with scroll hermetic compressors and R454B refrigerant gas.

CONSTRUCTION FEATURES

- Compressor: scroll type, rotary, hermetic complete with thermal protection and casing heater.
- 4 capacity steps with high efficiency at partial loads.
- Main and secondary heat exchangers: crossed flow stainless steel plate exchangers, complete with antifreeze heater, closed cell polyurethane foam rubber insulation and water flow differential pressure switch.
- Air side heat exchanger: finned coil with copper pipes and aluminium fins.
- Fan: external rotor axial type electric fans equipped with internal thermal protection and accident protection grilles. The electric fans are fitted with a proportional electronic device for continuous regulation of the rotation speed.
- Control: microprocessor electronic control with Adaptive Function Plus logic.
- Structure: made of galvanised and painted steel plate with polyester powder coating.
- The unit is also complete with:
  - compressor and fan circuit breaker switches;
  - electronic expansion valve;
  - display of cooling circuit high/low pressure;
  - master/slave control up to 4 units in parallel;
  - clock board;
  - control of Variable Primary Flow (VPF_R).

VERSIONS

- T - High efficiency version.
- Q - Super silenced version complete with compressor technical compartment soundproofing and reduced speed fans.

MODELS

- TXAETU: EXPsystems unit.
- TXAEQU: super silenced EXPsystems unit.

FACTORY FITTED ACCESSORIES

- PUMP with single or double electric pump, one of which automatic in standby. The electric pumps are available in the low or high head versions.
- TANK&PUMP with 440 - 700 litre integrated buffer tank (depending on the sizes) and single or double electric pump, complete with expansion tank, air vent valves, safety valve and water side pressure gauge.
- Inverter pump control for unit start-up.
- Condensing control with fans with EC motor.
- Condensing control with over-pressure fans (T version only)
- Power factor correction capacitors (cosϕ > 0.94).
- Forced limit of power consumption.
- Forced noise limit.
- Energy parameter measuring device.
- Optimised energy efficiency.
- Soft starter.
- Technical compressor compartment soundproofing.
- Compressor soundproof enclosures.
- Cooling circuit outlet valves.
- Refrigerant leak detector.
- Cooling circuit high and low pressure gauges.
- Double safety valves.
- Metal filters or coil protection nets.
- Copper/copper or copper/pre-painted aluminium coils.
- Control of min/max power supply voltage.
- Digital input for double set-point.
- 4-20 mA analogue signal for shifting set-point.
- Electrical panel resistance, buffer tank, electric pumps, if present.
- Interfaces for serial communication with other devices.
- Anti-vibration mounts.

SEPARATELY SUPPLIED ACCESSORIES

- Remote keypad with display.
- Rhoss supervisors for unit monitoring and remote management.
- Rhoss sequencer for integrated management of multiple chillers.

Features

EXP SYSTEMS · SCROLL COMPRESSOR · LOW GWP · GAS R454B · OUTDOOR · ADAPTIVE FUNCTION PLUS · EUROVENT CERTIFIED PERFORMANCE www.eurovent-certification.com

	TXAETU MODEL		4140	4160	4190	4210	4230	4260	4300	4330
	COOLING OPERATIONS (AUTOMATIC 1 MODE)									
❶	Nominal cooling capacity	kW	141,7	157,7	189,7	213,6	232,9	263,7	298,6	333,6
❶	Absorbed power	kW	47,9	54,4	63,4	74,2	82,9	90,9	103	117,5
❶	E.E.R.		2,96	2,9	2,99	2,88	2,81	2,9	2,9	2,84
	COOLING OPERATIONS + TOTAL RECOVERY (AUTOMATIC 2 MODE)									
❸	Nominal cooling capacity	kW	143,4	159,4	191,8	215,3	235,2	266,1	301,7	336,4
❸	Recovery heating capacity	kW	183,3	204,4	244,4	275,4	301,4	339,5	385,5	430,5
❸	T.E.R.		7,8	7,68	7,85	7,78	7,69	7,84	7,76	7,73
	HEATING OPERATIONS (MODE SELECT 1-2 AUTOMATIC 3)									
❷	Nominal heating capacity	kW	147,3	163,3	197,3	224,3	244,3	271,3	313,4	351,4
❷	Absorbed power	kW	45	50,4	61,1	68,6	75,2	84,3	96,1	109,8
❷	C.O.P.		3,27	3,24	3,23	3,27	3,25	3,22	3,26	3,2
	TXAEQU MODEL		**4140**	**4160**	**4190**	**4210**	**4230**	**4260**	**4300**	**4330**
	COOLING OPERATIONS (AUTOMATIC 1 MODE)									
❶	Nominal cooling capacity	kW	135,7	149,7	181,7	202,7	219,7	255,7	287,7	323,6
❶	Absorbed power	kW	51	56,9	64	75,9	85,5	89,4	102	112,8
❶	E.E.R.		2,66	2,63	2,84	2,67	2,57	2,86	2,82	2,87
	COOLING OPERATIONS + TOTAL RECOVERY (AUTOMATIC 2 MODE)									
❸	Nominal cooling capacity	kW	143,4	159,4	191,8	215,3	235,2	266,1	301,7	336,4
❸	Recovery heating capacity	kW	183,3	204,4	244,4	275,4	301,4	339,5	385,5	430,5
❸	T.E.R.		7,8	7,68	7,85	7,78	7,69	7,84	7,76	7,73
	HEATING OPERATIONS (MODE SELECT 1-2 AUTOMATIC 3)									
❷	Nominal heating capacity	kW	144,3	159,4	194,3	219,3	238,3	268,3	308,4	347,4
❷	Absorbed power	kW	44,3	49,3	58,9	66,5	73,5	81,3	92,9	105,3
❷	C.O.P.		3,26	3,23	3,3	3,3	3,24	3,3	3,32	3,3
	TXAETU-TXAEQU MODEL		**4140**	**4160**	**4190**	**4210**	**4230**	**4260**	**4300**	**4330**
❹	TXAETU sound pressure	dB(A)	54	55	57	57	58	60	61	62
❹	TXAEQU sound pressure	dB(A)	48	49	51	51	52	54	55	56
❺	TXAETU sound power	dB(A)	86	87	89	89	90	92	93	94
❺	TXAEQU sound power	dB(A)	80	81	83	83	84	86	87	88
	Scroll compressors/steps	n.	4/4	4/4	4/4	4/4	4/4	4/4	4/4	4/4
	Circuits	n.	2	2	2	2	2	2	2	2
	Electrical supply	V-ph-Hz	400-3-50	400-3-50	400-3-50	400-3-50	400-3-50	400-3-50	400-3-50	400-3-50
	DIMENSIONS AND WEIGHTS		**4140**	**4160**	**4190**	**4210**	**4230**	**4260**	**4300**	**4330**
	L - Width	mm	3450	3450	4800	4800	4800	4800	5300	5300
	H - Height	mm	2000	2000	2030	2030	2030	2030	2030	2030
	P - Depth	mm	1520	1520	2090	2090	2090	2090	2090	2090
❻	TXAETU weight	kg	1670	1685	2405	2550	2610	2750	3030	3250
❻	TXAEQU weight	kg	1735	1750	2495	2640	2700	2840	3120	3340

Data at the following conditions:
❶ Air: 35°C - Water: 12/7°C.
❷ Air: 7°C D.B. - 6°C W.B. - Water: 40/45°C.
❸ Evaporator water: 12/7°C. 40/45°C recovery water.
❹ In open field (Q = 2) at 10 m from the unit.
❺ Total sound power level in dB(A) based on measurements carried out in accordance with regulation UNI EN-ISO 9614.
❻ Weight referred to the unit without load and not accessorised.
Performance according to EN 14511.
T.E.R.: Total efficiency ratio

	SEASONAL ENERGY PERFORMANCE		4140	4160	4190	4210	4230	4260	4300	4330
	TXAETU MODEL SEASONAL PERFORMANCE IN HEATING MODE									
③	Pdesignh (EN 14825)	kW	127	142	171	194	212	236	275	309
③	SCOP (EN 14825)		3,67	3,64	3,62	3,66	3,62	3,59	3,62	3,52
④	η_s	%	144	143	142	143	142	140	142	138
	TXAEQU MODEL SEASONAL PERFORMANCE IN HEATING MODE									
③	Pdesignh (EN 14825)	kW	124	139	168	190	207	234	270	305
③	SCOP (EN 14825)		3,67	3,65	3,73	3,72	3,64	3,72	3,71	3,66
④	η_s	%	144	143	146	146	143	146	146	143

③ In Average climatic conditions, low temperature application (35°C)
④ Seasonal energy efficiency: low temperature heating in Average climate (EU Regulations No.811/2013 and No.813/2013)

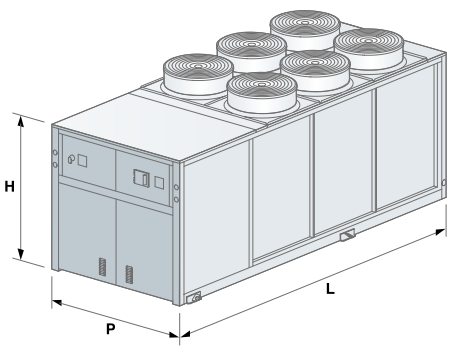

WinPACK EXP

TXAEY 4150÷4340

Cooling capacity:
137,7÷339,6 kW

Heating capacity:
150,3÷372,4 kW

TXAETY 4270

KEY FEATURES

- **Multi-purpose units with TER up to 7,63**
- **Integrated MASTER/SLAVE control**

EXPsystems - Air cooled multi-purpose ecological system with axial fans.
Range with scroll hermetic compressors and R410A refrigerant gas.

CONSTRUCTION FEATURES

- Compressor: scroll type, rotary, hermetic complete with thermal protection and casing heater.
- 4 capacity steps with high efficiency at partial loads.
- Main and secondary heat exchangers: crossed flow stainless steel plate exchangers, complete with antifreeze heater, closed cell polyurethane foam rubber insulation and water flow differential pressure switch.
- Air side heat exchanger: finned coil with copper pipes and aluminium fins.
- Fan: external rotor axial type electric fans equipped with internal thermal protection and accident protection grilles. The electric fans are fitted with a proportional electronic device for continuous regulation of the rotation speed.
- Control: microprocessor electronic control with Adaptive Function Plus logic.
- Structure: made of galvanised and painted steel plate with polyester powder coating.
- The unit is also complete with:
  - compressor and fan circuit breaker switches;
  - electronic expansion valve;
  - display of cooling circuit high/low pressure;
  - master/slave control up to 4 units in parallel;
  - clock board;
  - control of Variable Primary Flow (VPF_R).

VERSIONS

- T - High efficiency version.
- Q - Super silenced version complete with compressor technical compartment soundproofing and reduced speed fans.

MODELS

- TXAETY: EXPsystems unit.
- TXAEQY: super silenced EXPsystems unit.

FACTORY FITTED ACCESSORIES

- PUMP with single or double electric pump, one of which automatic in standby. The electric pumps are available in the low or high head versions.
- TANK&PUMP with 440 - 700 litre integrated buffer tank (depending on the sizes) and single or double electric pump, complete with expansion tank, air vent valves, safety valve and water side pressure gauge.
- Inverter pump control for unit start-up.
- Condensing control with fans with EC motor.
- Condensing control with over-pressure fans (T version only)
- Power factor correction capacitors (cosϕ > 0.94).
- Forced limit of power consumption.
- Forced noise limit.
- Energy parameter measuring device.
- Optimised energy efficiency.
- Soft starter.
- Technical compressor compartment soundproofing.
- Compressor soundproof enclosures.
- Cooling circuit outlet and inlet valves.
- Refrigerant leak detector.
- Cooling circuit high and low pressure gauges.
- Double safety valves.
- Metal filters or coil protection nets.
- Copper/copper or copper/pre-painted aluminium coils.
- Control of min/max power supply voltage.
- Digital input for double set-point.
- 4-20 mA analogue signal for shifting set-point.
- Electrical panel resistance, buffer tank, electric pumps, if present.
- Interfaces for serial communication with other devices.
- Anti-vibration mounts.

SEPARATELY SUPPLIED ACCESSORIES

- Remote keypad with display.
- Rhoss supervisors for unit monitoring and remote management.
- Rhoss sequencer for integrated management of multiple chillers.

Features

	TXAETY MODEL		4150	4160	4190	4220	4240	4270	4300	4340
	COOLING OPERATIONS (AUTOMATIC 1 MODE)									
❶	Nominal cooling capacity	kW	145,7	162,7	193,7	219,7	237,7	268,7	303,6	339,6
❶	Absorbed power	kW	49,4	56,5	65,9	77,4	85,8	94	105,4	120,4
❶	E.E.R.		2,95	2,88	2,94	2,84	2,77	2,86	2,88	2,82
	COOLING OPERATIONS + TOTAL RECOVERY (AUTOMATIC 2 MODE)									
❸	Nominal cooling capacity	kW	148,5	167,7	199,9	228,8	250,2	278,1	313,1	349,7
❸	Recovery heating capacity	kW	191,3	216,4	256,4	295,4	323,5	357,5	403,6	451,6
❸	T.E.R.		7,55	7,46	7,63	7,47	7,41	7,6	7,49	7,46
	HEATING OPERATIONS (MODE SELECT 1-2 AUTOMATIC 3)									
❷	Nominal heating capacity	kW	155,4	171,3	211,3	241,3	261,4	292,4	329,4	372,4
❷	Absorbed power	kW	48,1	53,4	66	74,9	81,4	91,4	102,3	116,4
❷	C.O.P.		3,23	3,21	3,2	3,22	3,21	3,2	3,22	3,2
	TXAEQY MODEL		**4150**	**4160**	**4190**	**4220**	**4240**	**4270**	**4300**	**4340**
	COOLING OPERATIONS (AUTOMATIC 1 MODE)									
❶	Nominal cooling capacity	kW	137,7	152,7	183,7	206,7	225,7	258,7	288,6	327,6
❶	Absorbed power	kW	52,2	59	66,8	79,2	89,6	92,7	104,6	115,4
❶	E.E.R.		2,64	2,59	2,75	2,61	2,52	2,79	2,76	2,84
	COOLING OPERATIONS + TOTAL RECOVERY (AUTOMATIC 2 MODE)									
❸	Nominal cooling capacity	kW	148,5	167,7	199,9	228,8	250,2	278,1	313,1	349,7
❸	Recovery heating capacity	kW	191,3	216,4	256,4	295,4	323,5	357,5	403,6	451,6
❸	T.E.R.		7,55	7,46	7,63	7,47	7,41	7,6	7,49	7,46
	HEATING OPERATIONS (MODE SELECT 1-2 AUTOMATIC 3)									
❷	Nominal heating capacity	kW	150,3	167,3	202,3	231,3	251,3	279,4	316,4	357,4
❷	Absorbed power	kW	46,5	52,1	62,6	71,4	78	86,5	97,4	110
❷	C.O.P.		3,23	3,21	3,23	3,24	3,22	3,23	3,25	3,25
	TXAETY-TXAEQY MODEL		**4150**	**4160**	**4190**	**4220**	**4240**	**4270**	**4300**	**4340**
❹	TXAETY sound pressure	dB(A)	54	55	57	57	58	60	61	62
❹	TXAEQY sound pressure	dB(A)	48	49	51	51	52	54	55	56
❺	TXAETY sound power	dB(A)	86	87	89	89	90	92	93	94
❺	TXAEQY sound power	dB(A)	80	81	83	83	84	86	87	88
	Scroll compressors/steps	n.	4/4	4/4	4/4	4/4	4/4	4/4	4/4	4/4
	Circuits	n.	2	2	2	2	2	2	2	2
	Electrical supply	V-ph-Hz	400-3-50	400-3-50	400-3-50	400-3-50	400-3-50	400-3-50	400-3-50	400-3-50
	DIMENSIONS AND WEIGHTS		**4150**	**4160**	**4190**	**4220**	**4240**	**4270**	**4300**	**4340**
	L - Width	mm	3450	3450	4800	4800	4800	4800	5300	5300
	H - Height	mm	2000	2000	2030	2030	2030	2030	2030	2030
	P - Depth	mm	1520	1520	2090	2090	2090	2090	2090	2090
❻	TXAETY weight	kg	1670	1685	2405	2550	2610	2750	3030	3250
❻	TXAEQY weight	kg	1735	1750	2495	2640	2700	2840	3120	3340

Data at the following conditions:
❶ Air: 35°C - Water: 12/7°C.
❷ Air: 7°C D.B. - 6°C W.B. - Water: 40/45°C.
❸ Evaporator water: 12/7°C. 40/45°C recovery water.
❹ In open field (Q = 2) at 10 m from the unit.
❺ Total sound power level in dB(A) based on measurements carried out in accordance with regulation UNI EN-ISO 9614.
❻ Weight referred to the unit without load and not accessorised.
Performance according to EN 14511.
T.E.R.: Total efficiency ratio

	SEASONAL ENERGY PERFORMANCE		4150	4160	4190	4220	4240	4270	4300	4340
	TXAETY MODEL SEASONAL PERFORMANCE IN HEATING MODE									
③	Pdesignh (EN 14825)	kW	136	152	187	213	232	259	292	331
③	SCOP (EN 14825)		3,61	3,59	3,57	3,59	3,55	3,53	3,57	3,49
④	η_s	%	141	141	140	141	139	138	140	137
	TXAEQY MODEL SEASONAL PERFORMANCE IN HEATING MODE									
③	Pdesignh (EN 14825)	kW	132	148	179	205	223	247	281	318
③	SCOP (EN 14825)		3,62	3,6	3,67	3,66	3,59	3,68	3,66	3,62
④	η_s	%	142	141	144	143	141	144	143	142

③ In Average climatic conditions, low temperature application (35°C)
④ Seasonal energy efficiency: low temperature heating in Average climate (EU Regulations No.811/2013 and No.813/2013)

WinPOWER ECO EXP

TXAEU 4370÷6660

Cooling capacity:
352,7÷641,5 kW

Heating capacity:
363,3÷645,5 kW

TXAETU 6660
with PTL, BFI accessory

KEY FEATURES

- **Multi-purpose units with TER up to 8**
- **Extended operating limits**
- **Units for systems with 2, 4 and 6 pipes**
- **SEER up to 5.29 with FIEC accessory (EC fans) and SCOP up to 3.89**
- **R454B eco-friendly gas**

EXPsystems - Air cooled multi-purpose ecological system with axial fans.
Range with scroll hermetic compressors and R454B refrigerant gas.

WITH THERMAL PROTECTION AND CASING HEATER.

- Up to 6 capacity steps with high efficiency at partial loads.
- Main and secondary heat exchangers: crossed flow stainless steel plate exchangers, complete with antifreeze heater, closed cell polyurethane foam rubber insulation and water flow differential pressure switch.
- Air side heat exchanger: finned coil with copper pipes and aluminium fins.
- Fan: external rotor axial type electric fans equipped with internal thermal protection, accident protection grilles and proportional electronic device for continuous fan rotation speed adjustment.
- Control: microprocessor electronic control with Adaptive Function Plus logic.
- Structure: load-bearing structure made of galvanised and painted steel plate with polyester powder coating.
- The unit is also complete with:
  - fan and compressor thermal magnetic circuit breakers, heat exchanger antifreeze heater;
  - display of cooling circuit high and low pressure;
  - electronic expansion valve;
  - clock board;
  - Master/Slave control up to 4 units in parallel;
  - control of Variable Primary Flow (VPF_R).

VERSIONS

- T - High efficiency version.

Q - Super silenced version complete with compressor technical compartment soundproofing and reduced speed fans.

MODELS

- TXAETU: EXPsystems unit.
- TXAEQU: super silenced EXPsystems unit.

FACTORY FITTED ACCESSORIES

- PUMP with single or double electric pump, one of which automatic in standby. The electric pumps are available in the main and secondary/recovery heat exchanger low or high head set-ups.
- Inverter pump control for unit start-up.
- Desuperheater.
- Condensing control with fans with EC motor.
- Condensing control with over-pressure fans (T version only).
- Power factor correction capacitors (cosϕ > 0.94).
- Forced limit of power consumption.
- Forced noise limit.
- Energy parameter measuring device.
- Soft starter.
- Compressor box and soundproofed cooling circuit.
- Compressor soundproof enclosures.
- Cooling circuit outlet valves.
- Refrigerant leak detector.
- Cooling circuit high and low pressure gauges.
- Double safety valves.
- Coil protection nets or buffer panels.
- Bottom compartment protection nets.
- Pre-painted copper/aluminium coils, copper/copper or with hydrophilic treatment.
- Digital input for double set-point.
- 4-20 mA analogue signal for shifting set-point.
- Electrical panel antifreeze heater, coil tanks, electric pumps and desuperheater, if applicable.
- Interfaces for serial communication with other devices.
- Colour touch user keypad (fitted on the machine or remotely) with 7" display.
- Spring anti-vibration mounts.
- Protective packaging.

SEPARATELY SUPPLIED ACCESSORIES

- Remote keypad with display.
- Thermostat with display.
- Rhoss supervisors for unit monitoring and remote management.
- Rhoss sequencer for integrated management of multiple chillers.

Features

EXP SYSTEMS · SCROLL COMPRESSOR · PATENT PENDING · LOW GWP · GAS R454B · OUTDOOR · ADAPTIVE FUNCTION PLUS · EUROVENT CERTIFIED PERFORMANCE www.eurovent-certification.com

	TXAETU MODEL		4370	4410	4450	5490	5520	5560	6600	6630	6660
	COOLING OPERATIONS (AUTOMATIC 1 MODE)										
❶	Nominal cooling capacity	kW	360,7	391,7	431,7	474,6	494,6	542,6	585,5	611,6	641,5
❶	Absorbed power	kW	110,3	125,1	137,9	151,1	159	174,5	184,1	192,9	203
❶	E.E.R.		3,27	3,13	3,13	3,14	3,11	3,11	3,18	3,17	3,16
	COOLING OPERATIONS + TOTAL RECOVERY (AUTOMATIC 2 MODE)										
❸	Nominal cooling capacity	kW	346,8	382,2	427,6	459,9	480,2	533,6	571,7	599,3	635,1
❸	Recovery heating capacity	kW	442,4	489,4	544,5	589,6	615,6	680,6	729,6	763,6	806,6
❸	T.E.R.		7,89	7,78	7,96	7,7	7,7	7,86	7,85	7,92	8,02
	HEATING OPERATIONS (MODE SELECT 1-2 AUTOMATIC 3)										
❷	Nominal heating capacity	kW	368,3	400,3	435,4	482,4	508,4	544,4	591,5	623,4	645,5
❷	Absorbed power	kW	110,6	121,7	133,1	145,7	154,1	165,5	179,8	189,5	196,8
❷	C.O.P.		3,33	3,29	3,27	3,31	3,3	3,29	3,29	3,29	3,28
	TXAEQU MODEL		**4370**	**4410**	**4450**	**5490**	**5520**	**5560**	**6600**	**6630**	**6660**
	COOLING OPERATIONS (AUTOMATIC 1 MODE)										
❶	Nominal cooling capacity	kW	352,7	381,7	420,7	463,6	482,6	528,6	572,5	595,6	624,6
❶	Absorbed power	kW	110,6	126	140,2	152	160,3	177,4	185,3	194,6	202,1
❶	E.E.R.		3,19	3,03	3	3,05	3,01	2,98	3,09	3,06	3,09
	COOLING OPERATIONS + TOTAL RECOVERY (AUTOMATIC 2 MODE)										
❸	Nominal cooling capacity	kW	346,8	382,2	427,6	459,9	480,2	533,6	571,7	599,3	635,1
❸	Recovery heating capacity	kW	442,4	489,4	544,5	589,6	615,6	680,6	729,6	763,6	806,6
❸	T.E.R.		7,89	7,78	7,96	7,7	7,7	7,86	7,85	7,92	8,02
	HEATING OPERATIONS (MODE SELECT 1-2 AUTOMATIC 3)										
❷	Nominal heating capacity	kW	363,3	395,3	429,3	475,4	500,4	537,4	582,5	613,4	636,5
❷	Absorbed power	kW	106,9	118,4	129,7	141,1	149,4	161,4	174,4	184,2	191,1
❷	C.O.P.		3,4	3,34	3,31	3,37	3,35	3,33	3,34	3,33	3,33
	TXAETU-TXAEQU MODEL		**4370**	**4410**	**4450**	**5490**	**5520**	**5560**	**6600**	**6630**	**6660**
❹	TXAETU sound pressure	dB(A)	62,5	63,5	63,5	64,5	64,5	64,5	65	65	66
❹	TXAEQU sound pressure	dB(A)	55	55,5	55,5	56,5	56,5	56,5	57	57	57
❺	TXAETU sound power	dB(A)	95	96	96	97	97	97	98	98	99
❺	TXAEQU sound power	dB(A)	87	88	88	89	89	89	90	90	90
	Scroll compressors/steps	n.	4/4	4/4	4/4	5/5	5/5	5/5	6/6	6/6	6/6
	Circuits	n.	2	2	2	2	2	2	2	2	2
	Electrical supply	V-ph-Hz	400-3-50	400-3-50	400-3-50	400-3-50	400-3-50	400-3-50	400-3-50	400-3-50	400-3-50
	DIMENSIONS AND WEIGHTS		**4370**	**4410**	**4450**	**5490**	**5520**	**5560**	**6600**	**6630**	**6660**
	L - Width	mm	4840	4840	4840	5940	5940	5940	7100	7100	7100
	H - Height	mm	2480	2480	2480	2480	2480	2480	2480	2480	2480
	P - Depth	mm	2260	2260	2260	2260	2260	2260	2260	2260	2260
❻	TXAETU weight	kg	3430	3550	3600	4310	4380	4410	5240	5310	5340
❻	TXAEQU weight	kg	3890	4010	4060	4870	4940	4970	5910	5980	6010

Data at the following conditions:
❶ Air: 35°C - Water: 12/7°C.
❷ Air: 7°C D.B. - 6°C W.B. - Water: 40/45°C.
❸ Evaporator water: 12/7°C. Recovery output water 45°C - Nominal flow rate.
❹ In open field (Q = 2) at 10 m from the unit.
❺ Total sound power level in dB(A) based on measurements carried out in accordance with regulation UNI EN-ISO 9614.
❻ Weight refers to the unit without load.
Performance according to EN 14511.
T.E.R.: Total efficiency ratio

	SEASONAL ENERGY PERFORMANCE		4370	4410	4450	5490	5520	5560	6600	6630	6660
	TXAETU MODEL SEASONAL PERFORMANCE IN COOLING MODE										
①	Pdesignc (EN 14825)	kW	-	-	-	-	494,6	542,6	585,5	611,6	641,5
①	SEER (EN 14825)		-	-	-	-	4,81	4,79	4,93	4,89	4,84
②	$\eta_{s,c}$	%	-	-	-	-	189	189	194	193	191
	TXAEQU MODEL SEASONAL PERFORMANCE IN COOLING MODE										
①	Pdesignc (EN 14825)	kW	-	-	-	-	482,6	528,6	572,5	595,6	624,6
①	SEER (EN 14825)		-	-	-	-	4,78	4,76	4,9	4,86	4,8
②	$\eta_{s,c}$	%	-	-	-	-	188	188	193	191	189
	TXAETU MODEL SEASONAL PERFORMANCE IN HEATING MODE										
③	Pdesignh (EN 14825)	kW	303	331	359	398	-	-	-	-	-
③	SCOP (EN 14825)		3,78	3,77	3,75	3,78	-	-	-	-	-
④	η_s	%	148	148	147	148	-	-	-	-	-
	TXAEQU MODEL SEASONAL PERFORMANCE IN HEATING MODE										
③	Pdesignh (EN 14825)	kW	298	326	354	392	-	-	-	-	-
③	SCOP (EN 14825)		3,86	3,82	3,78	3,82	-	-	-	-	-
④	η_s	%	151	150	148	150	-	-	-	-	-

① Low temperature application (7°C)
② Seasonal energy efficiency: low temperature cooling (EU Regulation 2016/2281)
③ In Average climatic conditions, low temperature application (35°C)
④ Seasonal energy efficiency: low temperature heating in Average climate (EU Regulations No.811/2013 and No.813/2013)

WinPOWER EXP

TXAEY 4400÷6660

Cooling capacity:
379,1÷654,8 kW

Heating capacity:
420,9÷706,2 kW

TXAESY 6580 with STE accessory and RPB coil protection nets accessory

KEY FEATURES

- **Multi-purpose units with TER up to 7.8**
- **Extended operating limits**
- **Units for systems with 2, 4 and 6 pipes**

EXPsystems - Air cooled multi-purpose ecological system with axial fans.
Range with scroll hermetic compressors and R410A refrigerant gas.

CONSTRUCTION FEATURES

- Compressor: scroll type, rotary, hermetic complete with thermal protection and casing heater.
- Up to 6 capacity steps with high efficiency at partial loads.
- Main and secondary heat exchangers: crossed flow stainless steel plate exchangers, complete with antifreeze heater, closed cell polyurethane foam rubber insulation and water flow differential pressure switch.
- Air side heat exchanger: finned coil with copper pipes and aluminium fins.
- Fan: external rotor axial type electric fans, equipped with internal thermal protection, accident protection grilles and a proportional electronic device for continuous fan rotation speed regulation (T version; fans with an EC motor are standard in the Q version)
- Control: microprocessor electronic control with Adaptive Function Plus logic.
- Structure: load-bearing structure made of galvanised and painted steel plate with polyester powder coating.
- The unit is also complete with:
  - fan and compressor thermal magnetic circuit breakers, heat exchanger antifreeze heater;
  - display of cooling circuit high and low pressure;
  - electronic expansion valve;
  - clock board;
  - Master/Slave control up to 4 units in parallel;
  - control of Variable Primary Flow (VPF_R).

VERSIONS

- T - High efficiency version.
- Q - Super silenced version complete with compressor technical compartment soundproofing, fans with EC motor at reduced speed.

MODELS

- TXAETY: EXPsystems unit.
- TXAEQY: super silenced EXPsystems unit.

FACTORY FITTED ACCESSORIES

- Tube and shell main and secondary heat exchangers.
- PUMP with single or double electric pump, one of which automatic in standby. The electric pumps are available in the main and secondary/recovery heat exchanger low or high head set-ups.
- TANK&PUMP with 700-1000 litre integrated buffer tank (depending on models) and single or double electric pump, complete with expansion tank, air vent valves, safety valve and water side pressure gauge.
- Inverter pump control for unit start-up (TXAEQY).
- Desuperheater.
- Condensing control with fans with EC motor (standard in Q versions).
- Condensing control with over-pressure fans (T version only).
- Power factor correction capacitors (cosϕ > 0.94).
- Forced limit of power consumption.
- Forced noise limit.
- Energy parameter measuring device.
- Soft starter.
- Compressor box and soundproofed cooling circuit.
- Compressor soundproof enclosures.
- Cooling circuit outlet and inlet valves.
- Refrigerant leak detector.
- Cooling circuit high and low pressure gauges.
- Double safety valves.
- Coil protection nets or metal filters.
- Bottom compartment protection nets.
- Pre-painted copper/aluminium or copper/copper coils.
- Digital input for double set-point.
- 4-20 mA analogue signal for shifting set-point.
- Electrical panel antifreeze heater, buffer tank, electric pumps and desuperheater, if applicable.
- Interfaces for serial communication with other devices.
- Spring anti-vibration mounts.

SEPARATELY SUPPLIED ACCESSORIES

- Remote keypad with display.
- Thermostat with display.
- Rhoss supervisors for unit monitoring and remote management.
- Rhoss sequencer for integrated management of multiple chillers.

Features

	TXAETY MODEL		4400	4440	6520	6580	6660
	COOLING OPERATIONS (AUTOMATIC 1 MODE)						
❶	Nominal cooling capacity	kW	397	434,8	525,4	577,4	648,1
❶	Absorbed power	kW	131,9	145	176,4	198,5	218,3
❶	E.E.R.		3,01	3	2,98	2,91	2,97
	COOLING OPERATIONS + TOTAL RECOVERY (AUTOMATIC 2 MODE)						
❸	Nominal cooling capacity	kW	400,8	441,7	531,2	583,2	654,8
❸	Recovery heating capacity	kW	516,1	568,4	686,8	760,9	847,2
❸	T.E.R.		7,79	7,77	7,67	7,43	7,64
	HEATING OPERATIONS (MODE SELECT 1-2 AUTOMATIC 3)						
❷	Nominal heating capacity	kW	426,1	470,4	569,8	629,9	706,2
❷	Absorbed power	kW	131,2	144,3	177	195,1	217,3
❷	C.O.P.		3,25	3,26	3,22	3,23	3,25
	TXAEQY MODEL		**4400**	**4440**	**6520**	**6580**	**6660**
	COOLING OPERATIONS (AUTOMATIC 1 MODE)						
❶	Nominal cooling capacity	kW	379,1	408,9	497,6	540,7	609,4
❶	Absorbed power	kW	136,4	150,9	182,9	213,7	224,9
❶	E.E.R.		2,78	2,71	2,72	2,53	2,71
	COOLING OPERATIONS + TOTAL RECOVERY (AUTOMATIC 2 MODE)						
❸	Nominal cooling capacity	kW	401	441,2	531,3	584	654,8
❸	Recovery heating capacity	kW	516,1	568,4	686,8	760,8	847,1
❸	T.E.R.		7,79	7,77	7,67	7,44	7,64
	HEATING OPERATIONS (MODE SELECT 1-2 AUTOMATIC 3)						
❷	Nominal heating capacity	kW	420,9	462,7	569,1	622,1	696,2
❷	Absorbed power	kW	126,8	138,9	170,9	186,8	208,4
❷	C.O.P.		3,32	3,33	3,33	3,33	3,34
	TXAETY -TXAEQY MODEL		**4400**	**4440**	**6520**	**6580**	**6660**
❹	TXAETY sound pressure	dB(A)	76	76,5	76,5	76,5	76,5
❹	TXAEQY sound pressure	dB(A)	54,5	55,5	55,5	55,5	57,5
❺	TXAETY sound power	dB(A)	96	97	97	97	98
❺	TXAEQY sound power	dB(A)	87	88	88	88	90
	Scroll compressors/steps	n.	4/4	4/4	6/6	6/6	6/6
	Circuits	n.	2	2	2	2	2
	Electrical supply	V-ph-Hz	400-3-50	400-3-50	400-3-50	400-3-50	400-3-50
	DIMENSIONS AND WEIGHTS		**4400**	**4440**	**6520**	**6580**	**6660**
	L - Width	mm	4840	4840	5940	5940	6840
	H - Height	mm	2450	2450	2450	2450	2450
	P - Depth	mm	2260	2260	2260	2260	2260
❻	TXAETY weight	kg	3650	3760	4480	4580	5250
❻	TXAEQY weight	kg	4340	4360	5270	5370	6070

Data at the following conditions:
❶ Air: 35°C - Water: 12/7°C.
❷ Air: 7°C D.B. - 6°C W.B. - Water: 40/45°C.
❸ Evaporator water: 12/7°C. Recovery output water 45°C - Nominal flow rate.
❹ In open field (Q = 2) at 10 m from the unit.
❺ Total sound power level in dB(A) based on measurements carried out in accordance with regulation UNI EN-ISO 9614.
❻ Weight refers to the unit without load.
Performance according to EN 14511.
T.E.R.: Total efficiency ratio

	SEASONAL ENERGY PERFORMANCE		4400	4440	6520	6580	6660
	TXAETY MODEL SEASONAL PERFORMANCE IN COOLING MODE						
①	Pdesignc (EN 14825)	kW	-	434,8	525,4	577,4	648,1
①	SEER (EN 14825)		-	4,63	4,64	4,61	4,63
②	$\eta_{s,c}$	%	-	182	183	182	182
	TXAEQY MODEL SEASONAL PERFORMANCE IN COOLING MODE						
①	Pdesignc (EN 14825)	kW	-	-	497,6	540,7	609,4
①	SEER (EN 14825)		-	-	4,76	4,79	4,77
②	$\eta_{s,c}$	%	-	-	188	189	188
	TXAETY MODEL SEASONAL PERFORMANCE IN HEATING MODE						
③	Pdesignh (EN 14825)	kW	361	-	-	-	-
③	SCOP (EN 14825)		3,63	-	-	-	-
④	η_s	%	142	-	-	-	-
	TXAEQY MODEL SEASONAL PERFORMANCE IN HEATING MODE						
③	Pdesignh (EN 14825)	kW	358	397	-	-	-
③	SCOP (EN 14825)		3,73	3,74	-	-	-
④	η_s	%	146	147	-	-	-

① Low temperature application (7°C)
② Seasonal energy efficiency: low temperature cooling (EU Regulation 2016/2281)
③ In Average climatic conditions, low temperature application (35°C)
④ Seasonal energy efficiency: low temperature heating in Average climate (EU Regulations No.811/2013 and No.813/2013)

Comby-Flow EXP

TXHEY 105÷112

Cooling capacity:
5,5÷12,2 kW

Heating capacity:
6,4÷13,7 kW

KEY FEATURES

- **Extremely compact multi-purpose units**

EXPsystems - Polyvalent ecological water-cooled system. Range with scroll hermetic compressors and R410A refrigerant gas.

CONSTRUCTION FEATURES

- Compressor: hermetic, rotary scroll type, complete with thermal protection.
- Primary side (user) and secondary side (recovery) heat exchanger and disposal unit: suitably insulated stainless steel plates, complete with antifreeze heater and water flow differential pressure switch.
- Control: microprocessor electronic control, iDRHOSS compatible with AdaptiveFunction logic.
- Condensing control: pressure switch valve and bypass solenoid valve.
- Structure: made of galvanised and painted steel plate with polyester powder coating, complete with soundproofed compressor.

MODELS

- TXHEY: EXPsystems unit.

PUMP SET-UP

- Primary side (user): pump unit complete with electric circulation pump, membrane expansion tank, safety valve, water drain valve, manual air vent valve and pressure gauge.
- Well/tower side (disposal unit): drain valve and vent valve. Internal valve for primary side system supply (user) from external network (disposal unit side: well or tower).
- Secondary side (recovery): pump unit complete with electric circulation pump, membrane expansion tank, safety valve, water fill and drain valve, manual air vent valve and pressure gauge.

FACTORY FITTED ACCESSORIES

- Digital input for double set-point
- 4-20mA analogue signal for shifting set-point.

SEPARATELY SUPPLIED ACCESSORIES

- Buffer tank.
- Buffer tank connection pipes.
- Water filter.
- Rubber anti-vibration mounts.
- Antifreeze heater on the buffer tank.
- Remote keypad with display.
- Clock board.
- Interfaces for serial communication with other devices.
- Serial converter (RS485/USB).
- Rhoss supervisors for unit monitoring and remote management.

Features

	TXHEY MODEL		105	107	109	112
	COOLING OPERATIONS (AUTOMATIC 1 MODE)					
❶	Nominal cooling capacity	kW	5,5	6,9	9,5	12,2
❶	Absorbed power	kW	1,74	2,27	2,99	3,82
❶	E.E.R.		3,16	3,04	3,18	3,19
	COOLING OPERATIONS + TOTAL RECOVERY (AUTOMATIC 2 MODE)					
❷	Nominal cooling capacity	kW	4,7	6	7,9	9,9
❷	Recovery heating capacity	kW	6,7	8,6	11,2	14,4
❷	T.E.R.		5,79	5,28	5,53	5,26
	HEATING OPERATIONS (MODE SELECT 1-2 AUTOMATIC 3)					
❸	Nominal heating capacity	kW	6,4	8,1	10,6	13,7
❹	Heating capacity	kW	7,3	9,5	12,4	14,7
❸	Absorbed power	kW	2,2	3,1	3,8	4,7
❸	C.O.P.		2,91	2,64	2,81	2,95
	TXHEY MODEL					
❺	Sound pressure	dB(A)	49	51	51	53
	Scroll compressors/steps	n.	1/1	1/1	1/1	1/1
	Circuits	no.	1	1	1	1
	KA buffer tank water content	l	20	20	30	30
❶	Available nominal head of pump on main heat exchanger	kPa	47	54,7	82,2	78,2
❷	Available nominal head on secondary recovery heat exchanger	kPa	32,4	42,4	72,1	66,7
	Electrical supply	V-ph-Hz	230-1-50	230-1-50 / 400-3+N-50	230-1-50 / 400-3+N-50	230-1-50 / 400-3+N-50
	DIMENSIONS AND WEIGHTS		**105**	**107**	**109**	**112**
	L - Width	mm	585	585	660	660
	H - TXHEY P height	mm	535	535	535	535
	H - TXHEY P + KA height	mm	855	855	855	855
	P - Depth	mm	520	520	560	560
	TXHEY Weight	kg	112	118	122	130
	KA Weight	kg	38	38	43	43

Data at the following conditions:
❶ Chilled water: 12/7°C - Condenser water: 30/35°C
❷ Chilled water: 12/7°C - Recovery water: 40/45°C.
❸ Hot water: 40/45°C. Evaporator water: 10/7°C.
❹ Hot water: 30/35°C. Evaporator water: 10/7°C.
❺ In open field (Q = 2) at 1 m from the unit.
Performance according to EN 14511.
T.E.R.: Total efficiency ratio
KA = buffer tank.
KTC = connecting pipe.

	SEASONAL ENERGY PERFORMANCE		105	107	109	112
	TXHEY MODEL SEASONAL PERFORMANCE IN HEATING MODE					
③	Pdesignh (EN 14825)	kW	9	12	15	18
③	SCOP (EN 14825)		4,56	5,08	4,97	4,77
④	η_s	%	174	195	191	183
	Energy class		A++	A+++	A+++	A+++

③ In Average climatic conditions, low temperature application (35°C)
④ Seasonal energy efficiency: low temperature heating in Average climate (EU Regulations No.811/2013 and No.813/2013)

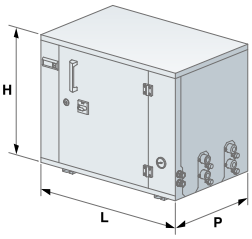

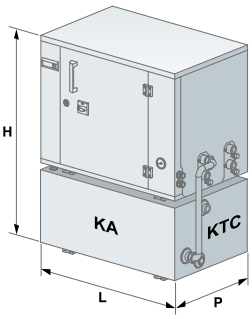

Web code 245÷2185: **YFX21**
Web code 4180÷4410: **YFX31**

Y-Flow EXP

TXHEY 245÷4410

Cooling capacity:
44,2÷397,1 kW

Heating capacity:
49,3÷459,3 kW

EXPsystems - Polyvalent ecological water-cooled system. Range with scroll hermetic compressors and R410A refrigerant gas.

CONSTRUCTION FEATURES

- Compressor: scroll type, rotary, hermetic complete with thermal protection and casing heater.
- Primary side (user), secondary side (recovery) heat exchangers and disposal unit: crossed flow stainless steel plate exchangers, complete with antifreeze heater, closed cell polyurethane foam rubber insulation and water flow differential pressure switch.
- Control: microprocessor electronic control with Adaptive Function Plus logic.
- Structure: made of galvanised and painted steel plate with polyester powder coating.
- The unit is also complete with:
  - compressor circuit breaker switches;
  - electronic expansion valve;
  - display of cooling circuit high and low pressure;
  - clock board;
  - outdoor temperature probe for set-point compensation;
  - Master/Slave control up to 4 units in parallel;
  - 0-10V analogue signal for condensing/evaporating control performed by external device;
  - control of Variable Primary Flow (VPF_R).

VERSIONS

- B - Standard version.

MODELS

- TXHEBY: EXPsystems unit.

Features

FACTORY FITTED ACCESSORIES

- Cooling circuit high and low pressure gauges.
- Forced limit of power consumption.
- Soft starter.
- Silenced set up.
- Digital input for double set-point.
- 4-20 mA analogue signal for shifting set-point.
- Interfaces for serial communication with other devices.
- Anti-vibration mounts.

SEPARATELY SUPPLIED ACCESSORIES

- 3-way modulating condensing control valve.
- 2-way modulating condensing control valve.
- Water filter.
- Remote keypad with display.
- Thermostat with display.
- Serial converter (RS485/USB).
- RHOSS supervisors for unit monitoring and remote management.
- Rhoss sequencer for integrated management of multiple chillers.

Y-Flow EXP

TXHEY 245÷4410

	TXHEBY MODEL		245	250	260	270	290	2115	2130	2145	2165	2185
	COOLING OPERATIONS (AUTOMATIC 1 MODE)											
❶	Nominal cooling capacity	kW	47	55,6	62,7	71,8	92,8	123,8	137,5	153,9	173,3	193,2
❷	Nominal cooling capacity	kW	44,2	52	59,2	67,6	88	114,6	128	142,4	161,7	180,6
❶	Absorbed power	kW	8,5	9,8	11,3	13	16,9	21,5	24,7	26,7	31,8	36,3
❷	Absorbed power	kW	9,9	11,4	13,1	14,9	19,1	25,5	28,8	31,7	36,8	41,9
❶	E.E.R.		5,51	5,69	5,55	5,51	5,48	5,75	5,57	5,76	5,44	5,32
❷	E.E.R.		4,49	4,57	4,52	4,54	4,61	4,5	4,45	4,5	4,4	4,32
	COOLING OPERATIONS + TOTAL RECOVERY (AUTOMATIC 2 MODE)											
❸	Nominal cooling capacity	kW	38,7	45,9	52,8	58,8	79,5	104,2	114,4	126,3	143	160,1
❸	Recovery heating capacity	kW	50,8	59,9	68,9	76,6	103,5	135,4	149,4	165,4	188,5	212
❸	Absorbed power	kW	12,2	14	16,1	17,8	24	31,6	35,4	39,5	46	52,3
❸	T.E.R.		7,32	7,55	7,57	7,62	7,63	7,59	7,45	7,39	7,21	7,12
	HEATING OPERATIONS (MODE SELECT 1-2 AUTOMATIC 3)											
❹	Nominal heating capacity	kW	49,3	58,1	66,9	74,3	100,6	131,8	145,5	160,9	183,5	206,4
❹	Total absorbed power	kW	12,1	13,9	15,9	17,6	23,7	31,4	35,14	39,1	45,6	52,1
❹	C.O.P.		4,07	4,19	4,2	4,21	4,25	4,2	4,14	4,11	4,02	3,96
	TXHEBY MODEL		**245**	**250**	**260**	**270**	**290**	**2115**	**2130**	**2145**	**2165**	**2185**
❺	Sound power	dB(A)	67	67	68	68	70	72	73	74	74	75
	Scroll compressors/steps	n.	2/2	2/2	2/2	2/2	2/2	2/2	2/2	2/2	2/2	2/2
	Circuits	n.	1	1	1	1	1	1	1	1	1	1
	Electrical supply	V-ph-Hz					400-3+N-50					
	DIMENSIONS AND WEIGHTS		**245**	**250**	**260**	**270**	**290**	**2115**	**2130**	**2145**	**2165**	**2185**
	L - Width	mm	1020	1020	1020	1020	1020	1270	1270	1270	1270	1270
	H - Height	mm	1470	1470	1470	1470	1470	1620	1620	1620	1620	1620
	P - Depth	mm	870	870	870	870	870	870	870	870	870	870
❻	Weight	kg	510	525	540	565	595	920	960	995	1035	1045

Data at the following conditions:

❶ Chilled water (user): 12/7°C - Condenser water (disposal unit-source): 14/30°C. (Gross value)
❷ Chilled water (user): 12/7°C - Condenser water (disposal unit-source): 30/35°C
❸ Chilled water (user): 12/7°C - Condenser water (recovery unit): 40/45°C.
❹ Evaporator water (source): 10/7°C - Hot water (utility): 40/45°C.
❺ Total sound power level in dB(A) based on measurements carried out in accordance with regulation UNI EN-ISO 9614.
❻ Empty weight
Performance according to EN 14511.
T.E.R.: Total efficiency ratio

	SEASONAL ENERGY PERFORMANCE		245	250	260	270	290	2115	2130	2145	2165	2185
	TXHEBY MODEL SEASONAL PERFORMANCE IN COOLING MODE											
①	Pdesignc (EN 14825)	kW	-	-	-	-	-	-	-	-	-	-
①	SEER (EN 14825)		-	-	-	-	-	-	-	-	-	-
②	$\eta_{s,c}$	%	-	-	-	-	-	-	-	-	-	-
	TXHEBY MODEL SEASONAL PERFORMANCE IN HEATING MODE											
③	Pdesignh (EN 14825)	kW	59	69	80	89	119	156	173	191	218	245
③	SCOP (EN 14825)		5,95	6,14	6,27	6,16	6,05	6,47	6,36	6,35	6,13	5,92
④	η_s	%	230	238	243	238	234	251	247	246	237	229
	Energy class		A+++	A+++	-	-	-	-	-	-	-	-

① Low temperature application (7°C)
② Seasonal energy efficiency: low temperature cooling (EU Regulation 2016/2281)
③ In Average climatic conditions, low temperature application (35°C)
④ Seasonal energy efficiency: low temperature heating in Average climate (EU Regulations No.811/2013 and No.813/2013)
④ Seasonal energy efficiency: low temperature heating in Average climate (EU Regulations No.811/2013 and No.813/2013)

	TXHEBY MODEL		4180	4205	4235	4260	4290	4330	4360	4410
	COOLING OPERATIONS (AUTOMATIC 1 MODE)									
❶	Nominal cooling capacity	kW	188,5	214,7	241,2	270,2	302,7	341,1	379,9	420,9
❷	Nominal cooling capacity	kW	176,4	201,7	226,7	253,6	280,2	317,9	354	397,1
❶	Absorbed power	kW	32,2	37,2	41,9	46,6	50,4	59,1	67,2	78,9
❷	Absorbed power	kW	37,4	42,9	48,2	54,1	60,2	69,3	79,1	90,5
❶	E.E.R.		5,85	5,77	5,76	5,8	6,01	5,77	5,65	5,33
❷	E.E.R.		4,72	4,71	4,71	4,69	4,66	4,59	4,48	4,39
	COOLING OPERATIONS + TOTAL RECOVERY (AUTOMATIC 2 MODE)									
❸	Nominal cooling capacity	kW	159,3	181	202,2	228	253,3	287	321,5	358,6
❸	Recovery heating capacity	kW	203,2	232,2	260,6	293,8	327,1	372,5	418,8	469,3
❸	Absorbed power	kW	44,2	51,5	58,8	66,1	73,7	85,4	96,9	110,5
❸	T.E.R.		8,2	8,03	7,87	7,89	7,87	7,73	7,64	7,49
	HEATING OPERATIONS (MODE SELECT 1-2 AUTOMATIC 3)									
❹	Nominal heating capacity	kW	198,8	227,5	255,4	288	320	367	412,6	459,3
❹	Total absorbed power	kW	43,9	51,1	58,4	65,6	72,9	84,6	95,9	109,4
❹	C.O.P.		4,52	4,45	4,37	4,39	4,39	4,34	4,3	4,2
	TXHEBY MODEL		**4180**	**4205**	**4235**	**4260**	**4290**	**4330**	**4360**	**4410**
❺	Sound power	dB(A)	77	77	78	79	80	81	82	83
	Scroll compressors/steps	n.	4/4	4/4	4/4	4/4	4/4	4/4	4/4	4/4
	Circuits	n.	2	2	2	2	2	2	2	2
	Electrical supply	V-ph-Hz	400-3-50	400-3-50	400-3-50	400-3-50	400-3-50	400-3-50	400-3-50	400-3-50
	DIMENSIONS AND WEIGHTS		**4180**	**4205**	**4235**	**4260**	**4290**	**4330**	**4360**	**4410**
	L - Width	mm	2600	2600	2600	2600	2600	2600	2600	2600
	H - Height	mm	1860	1860	1860	1860	1860	1860	1860	1860
	P - Depth	mm	870	870	870	870	870	870	870	870
❻	Weight	kg	1690	1730	1780	1820	1890	1960	2000	2070

Data at the following conditions:
❶ Chilled water (user): 12/7°C - Condenser water (disposal unit-source): 14/30°C. (Gross value)
❷ Chilled water (user): 12/7°C - Condenser water (disposal unit-source): 30/35°C
❸ Chilled water (user): 12/7°C - Condenser water (recovery unit): 40/45°C.
❹ Evaporator water (source): 10/7°C - Hot water (utility): 40/45°C.
❺ Total sound power level in dB(A) based on measurements carried out in accordance with regulation UNI EN-ISO 9614.
❻ Empty weight
Performance according to EN 14511.
T.E.R.: Total efficiency ratio

	SEASONAL ENERGY PERFORMANCE		4180	4205	4235	4260	4290	4330	4360	4410
	TXHEBY MODEL SEASONAL PERFORMANCE IN COOLING MODE									
①	Pdesignc (EN 14825)	kW	-	-	-	-	-	317,9	354	397,1
①	SEER (EN 14825)		-	-	-	-	-	6,24	6,14	5,94
②	$\eta_{s,c}$	%	-	-	-	-	-	247	242	234
	TXHEBY MODEL SEASONAL PERFORMANCE IN HEATING MODE									
③	Pdesignh (EN 14825)	kW	234	267	300	340	379	-	-	-
③	SCOP (EN 14825)		6,75	6,65	6,54	6,6	6,68	-	-	-
④	η_s	%	262	258	253	256	259	-	-	-
	Energy class		-	-	-	-	-	-	-	-

① Low temperature application (7°C)
② Seasonal energy efficiency: low temperature cooling (EU Regulation 2016/2281)
③ In Average climatic conditions, low temperature application (35°C)
④ Seasonal energy efficiency: low temperature heating in Average climate (EU Regulations No.811/2013 and No.813/2013)
④ Seasonal energy efficiency: low temperature heating in Average climate (EU Regulations No.811/2013 and No.813/2013)

Condensing units
System accessories

Condensing units

System accessories

Condensing units

Condensing units 162
MCAEBY 115÷130

Condensing units 164
MCAEBY 233÷2160

Remote condensers

Remote condensers 166
CCAMY 115÷2185

Pumping and tank units

Pumping units 170
AS 0300÷2500

Boilers for domestic hot water

Boilers for domestic hot water 172
KACS

Thermal flywheel

Thermal flywheel 174
KSI

Condensing units

MCAEBY 115÷130

Cooling capacity:
16,4÷31,5 kW

Air cooled condensing units with axial fans. Range with hermetic compressors and R410A refrigerant gas.

CONSTRUCTION FEATURES

- Compressor: Scroll hermetic complete with thermal protection and crankcase heater.
- Air side heat exchanger: featuring finned coil with copper pipes and aluminium fins, complete with protective mesh.
- Fan: external rotor axial type electric fans equipped with internal thermal protection, accident protection grilles and proportional electronic device for pressure and continuous fan rotation speed adjustment.
- Control: microprocessor electronic control.
- Structure: made of galvanised and painted steel plate

MODELS

- MCAEBY: unit designed for cooling only.

FACTORY FITTED ACCESSORIES

- Silenced set up.

SEPARATELY SUPPLIED ACCESSORIES

- Rubber anti-vibration mounts.
- RS485 Interface for serial communication with other devices.
- Serial converter (RS485/USB).

Features

	MCAEBY MODEL		115	117	122	124	127	130
❶	Nominal cooling capacity	kW	16,4	18,5	24,7	26,5	29	31,5
❶	Absorbed power	kW	5,5	6,3	7,9	9	9,8	11
	MCAEBY MODEL		**115**	**117**	**122**	**124**	**127**	**130**
❸	Sound pressure	dB(A)	50	50	52	52	53	53
	Electrical supply	V-ph-Hz	400-3+N-50	400-3+N-50	400-3+N-50	400-3+N-50	400-3+N-50	400-3+N-50
	DIMENSIONS AND WEIGHTS		**115**	**117**	**122**	**124**	**127**	**130**
	L - Width	mm	1230	1230	1230	1230	1535	1535
	H - Height	mm	1090	1090	1280	1280	1510	1510
	P - Depth	mm	580	580	600	600	695	695
	MCAEBY Weight	kg	140	150	200	225	270	300

Data at the following conditions:
❶ Air: 35°C - Saturated intake gas: 5°C.
❸ In open field (Q = 2) at 5 m from the unit.

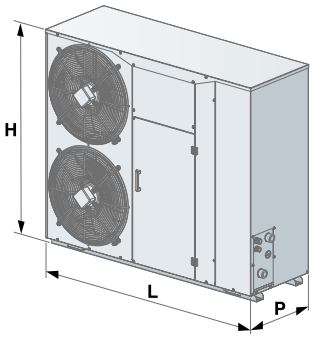

Condensing units

MCAEBY 233÷2160

Cooling capacity:
34,5÷162,6 kW

Air cooled condensing units with axial fans. Range with scroll hermetic compressors and R410A refrigerant gas.

CONSTRUCTION FEATURES

- Compressor: hermetic, rotary scroll type, complete with thermal protection and crankcase heater.
- Air side heat exchanger: finned coil with copper pipes and aluminium fins.
- Fan: external rotor axial type electric fans equipped with internal thermal protection, accident protection grilles and proportional electronic device for continuous fan rotation speed adjustment.
- Control: microprocessor electronic control.
- Structure: in hot galvanised and painted sheet steel, with polyurethane powder coating.

- The unit is also complete with:
  - compressor and fan circuit breaker switches,
  - N2 nitrogen pre-charge.

MODELS

- MCAEBY: unit designed for cooling only.

FACTORY FITTED ACCESSORIES

- Silenced version
- Coil protection metal filters.
- Cooling circuit high and low pressure gauges.
- Liquid receiver.
- Pre-painted copper/aluminium or copper/copper coils.
- Rubber anti-vibration mounts.

SEPARATELY SUPPLIED ACCESSORIES

- Thermostatic valve kit.
- Interfaces for serial communication with other devices.
- Serial converter (RS485/USB).

Features

	MCAEBY MODEL		233	238	245	250	260	265	280
❶	Nominal cooling capacity	kW	34,5	41,2	46,7	54,3	62,5	67,7	79,1
❶	Absorbed power	kW	12,5	14,7	17,6	19,9	22,4	24,3	28,4
	MCAEBY MODEL		**233**	**238**	**245**	**250**	**260**	**265**	**280**
❸	Sound pressure	dB(A)	46,5	47	48	48	49	49	50
	Electrical supply	V-ph-Hz	400-3+N-50	400-3+N-50	400-3+N-50	400-3+N-50	400-3+N-50	400-3+N-50	400-3+N-50
	DIMENSIONS AND WEIGHTS		**233**	**238**	**245**	**250**	**260**	**265**	**280**
	L - Width	mm	1710	2315	2315	2315	2315	2315	2650
	H - Height	mm	1570	1570	1570	1570	1570	1570	1700
	P - Depth	mm	1000	1000	1000	1000	1000	1000	1210
	MCAEBY Weight	kg	400	546	536	570	586	624	880

	MCAEBY MODEL		290	2100	2115	2130	2145	2160
❶	Nominal cooling capacity	kW	87,1	101	116,2	126,5	145,6	162,6
❶	Absorbed power	kW	32,9	36,2	41,2	46,2	52,9	60,2
	MCAEBY MODEL		**290**	**2100**	**2115**	**2130**	**2145**	**2160**
❸	Sound pressure	dB(A)	52	52	58	58	58	59
	Electrical supply	V-ph-Hz	400-3+N-50	400-3+N-50	400-3+N-50	400-3+N-50	400-3+N-50	400-3+N-50
	DIMENSIONS AND WEIGHTS		**290**	**2100**	**2115**	**2130**	**2145**	**2160**
	L - Width	mm	3150	3150	3150	3150	3150	3450
	H - Height	mm	1700	1700	1730	1730	1730	1700
	P - Depth	mm	1210	1210	1210	1210	1210	1210
	MCAEBY Weight	kg	935	950	998	998	1052	1108

Data at the following conditions:
❶ Air: 35°C - Saturated intake gas: 5°C.
❸ In open field (Q = 2) at 10 m from the unit.

Remote condensers

CCAMY 115÷2185

Vertical installation

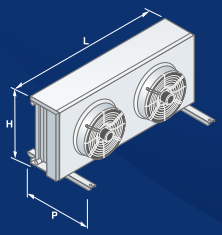

Horizontal installation

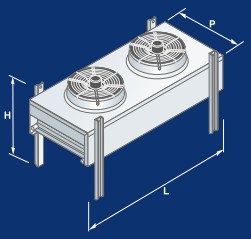

Vertical installation

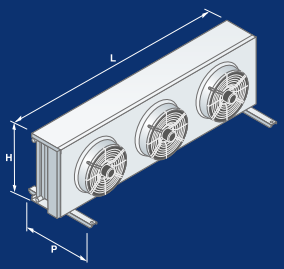

Horizontal installation

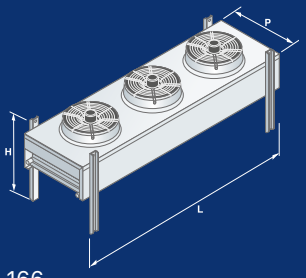

Remote air condensers with axial fans for direct expansion units operating with R410A refrigerant gas.

CONSTRUCTION FEATURES

- Heat exchanger: with high efficiency finned coil with copper pipes mechanically expanded on aluminium fins.
  The cooling unit connection fittings require brazing. Design pressure 40 barg. Each heat exchanger is tested against leaks with dry air and supplied preloaded with nitrogen.
- Fans: of axial type with external rotor with fans equipped with innovative polymer blades and integrated thermal protection to provide protection against thermal overload. IP54 protection rating, in compliance with DIN 40050. The fan motors are also standard supplied with phase cutting speed control.
- Structure: pre-painted galvanised steel plate with epoxy finish (RAL 9002).
  The coil structure is made of Aluminium alloy (AlMg3), for protection against vibration and thermal expansion.
  The condensers are supplied with support bracket kit for vertical installation with horizontal air flow (CCAMY V) or horizontal with vertical air flow (CCAMY H).
  The support brackets are made of galvanised steel

Electrical panel complete with:
- electrical wiring suited for 400V-3ph-50Hz power supply voltage;
- electrical supply junction box with disconnecting switch where the general power supply voltage of the remote condenser can be connected;
- self-extinguishing plastic casing (IP55) containing the fan rotation speed continuous control device, via a phase cut device,
- pressure probe,
- fan electrical wiring,

contact for external signal of fan thermal intervention, remote on/off contact.Ù

VERSIONS

- The CCAMY series remote condensers are available in 3 construction options that meet the different system requirements regarding ambient noise emission containment:
  - Basic "B" version (except mod.115 and 118)
  - Version "S" Silenced
  - Version "Q" Super-silenced

Features

GAS R410A OUTDOOR

	CCAMBY MODEL				122	125	230	240
	VERSION B "Basic"							
❶	Nominal heating capacity	kW			27	30	41	51
❷	Sound pressure	dB(A)			46	49	51	51
	Cooling circuits	n.			1	1	1	1
	Fans	no.			1	1	1	2
	Fan nominal air flow	m³/h			6036	6986	11000	12780
	Rotation speed	rpm			1110	1360	1330	1110
❶	Absorbed power	kW			0,49	0,69	1,25	0,98
	Electrical supply	V-ph-Hz			400-3-50	400-3-50	400-3-50	400-3-50
	DIMENSIONS AND WEIGHT							
	H horizontal installation							
	L - Width	mm			1115	1115	1261	2015
	H - Height	mm			846	846	1171	846
	P - Depth	mm			868	868	1100	868
	V vertical installation							
	L - Width	mm			1115	1115	1261	2015
	H - Height	mm			828	828	1034	828
	P - Depth	mm			470	470	750	470
	Weight *	Kg			54	54	83	92

	CCAMSY MODEL		115	118	122	125	230	240
	VERSION S "Silenced"							
❶	Nominal heating capacity	kW	19,5	22	28,5	31	39,5	47
❷	Sound pressure	dB(A)	37	39	32	40	42	43
	Cooling circuits	n.	1	1	1	1	1	1
	Fans	no.	1	1	2	2	2	2
	Fan nominal air flow	m³/h	4629	4394	7527	8536	9258	14510
	Rotation speed	rpm	920	920	680	785	920	690
❶	Absorbed power	kW	0,26	0,26	0,3	0,38	0,52	0,8
	Electrical supply	V-ph-Hz	400-3-50	400-3-50	400-3-50	400-3-50	400-3-50	400-3-50
	DIMENSIONS AND WEIGHT							
	H horizontal installation							
	L - Width	mm	1115	1115	2015	2015	2015	2261
	H - Height	mm	846	846	846	846	846	1171
	P - Depth	mm	868	868	868	868	868	1100
	V vertical installation							
	L - Width	mm	1115	1115	2015	2015	2015	2261
	H - Height	mm	828	828	828	828	828	1034
	P - Depth	mm	470	470	470	470	470	750
	Weight *	Kg	49	54	83	92	92	121

	CCAMQY MODEL		115	118	122	125	230	240
	VERSION Q "Super-silenced"							
❶	Nominal heating capacity	kW	19	21,5	26	32	36,5	49
❷	Sound pressure	dB(A)	36	31	31	32	40	34
	Cooling circuits	n.	1	1	1	1	1	1
	Fans	no.	1	1	1	2	2	2
	Fan nominal air flow	m³/h	3779	5537	4993	7060	8016	10500
	Rotation speed	rpm	785	650	650	680	785	650
❶	Absorbed power	kW	0,19	0,24	0,24	0,3	0,38	0,47
	Electrical supply	V-ph-Hz	400-3-50	400-3-50	400-3-50	400-3-50	400-3-50	400-3-50
	DIMENSIONS AND WEIGHT							
	H horizontal installation							
	L - Width	mm	1115	1261	1261	2015	2015	2261
	H - Height	mm	846	1171	1171	846	846	1171
	P - Depth	mm	868	1100	1100	868	868	1100
	V vertical installation							
	L - Width	mm	1115	1261	1261	2015	2015	2261
	H - Height	mm	828	1034	1034	828	828	1034
	P - Depth	mm	470	750	750	470	470	750
	Weight *	Kg	54	78	85	94	101	135

Data at the following conditions:
❶ Outdoor air temperature 35°C D.B., condensation temperature 50°C, desuperheating 25°K. Maximum speed
❷ In open field (Q = 2) at 10 m from the unit.
* Empty weight

Sound pressure level correction for distances other than 10m									
Distance	**(m)**	**2**	**3**	**4**	**5**	**7**	**10**	**15**	**20**
Correction	dB(A)	11	8,5	7	5	2,5	0	-3	-5,5

Remote condensers

CCAMY 115÷2185

	CCAMBY MODEL		245	250	260	270	275	290
	VERSION B "Basic"							
❶	Nominal heating capacity	kW	57	68	79	80	89,5	109
❷	Sound pressure	dB(A)	52	54	54	54	54	56
	Cooling circuits	n.	1	1	1	1	1	1
	Fans	no.	2	3	2	2	2	4
	Fan nominal air flow	m³/h	9258	23280	22000	22000	21070	29400
	Rotation speed	rpm	920	1360	1330	1330	1330	1360
❶	Absorbed power	kW	0,52	2,07	2,5	2,5	2,5	2,76
	Electrical supply	V-ph-Hz	400-3-50	400-3-50	400-3-50	400-3-50	400-3-50	400-3-50
	DIMENSIONS AND WEIGHT							
	H horizontal installation							
	L - Width	mm	2015	2915	2261	2261	2261	3815
	H - Height	mm	846	846	1171	1171	1171	846
	P - Depth	mm	868	868	1100	1100	1100	868
	V vertical installation							
	L - Width	mm	2015	2915	2261	2261	2261	3261
	H - Height	mm	828	828	1034	1034	1034	828
	P - Depth	mm	470	470	750	750	750	470
	Weight *	Kg	101	136	169	169	169	237

	CCAMSY MODEL		245	250	260	270	275	290
	VERSION S "Silenced"							
❶	Nominal heating capacity	kW	54	69	77	85	99,5	106,5
❷	Sound pressure	dB(A)	48	48	49	50	50	51
	Cooling circuits	n.	1	1	1	1	1	1
	Fans	no.	2	2	2	3	3	3
	Fan nominal air flow	m³/h	18020	16920	17030	27030	25380	27070
	Rotation speed	rpm	890	890	1070	890	890	1070
❶	Absorbed power	kW	1,2	1,2	1,68	1,8	1,8	2,52
	Electrical supply	V-ph-Hz	400-3-50	400-3-50	400-3-50	400-3-50	400-3-50	400-3-50
	DIMENSIONS AND WEIGHT							
	H horizontal installation							
	L - Width	mm	2261	2261	2261	3261	3261	3261
	H - Height	mm	1171	1171	1171	1171	1171	1171
	P - Depth	mm	1100	1100	1100	1100	1100	1100
	V vertical installation							
	L - Width	mm	2261	2261	2261	3261	3261	3261
	H - Height	mm	1034	1034	1034	1034	1034	1034
	P - Depth	mm	750	750	750	750	750	750
	Weight *	Kg	121	136	149	193	237	257

	CCAMQY MODEL		245	250	260	270	275	290
	VERSION Q "Super-silenced"							
❶	Nominal heating capacity	kW	55	64	74,5	84	92	113
❷	Sound pressure	dB(A)	35	44	45	45	44	45
	Cooling circuits	n.	1	1	1	1	1	1
	Fans	no.	4	3	3	3	3	4
	Fan nominal air flow	m³/h	15050	13180	21760	20060	18660	26740
	Rotation speed	rpm	680	920	690	690	690	690
❶	Absorbed power	kW	0,6	0,78	1,2	1,2	1,2	1,6
	Electrical supply	V-ph-Hz	400-3-50	400-3-50	400-3-50	400-3-50	400-3-50	400-3-50
	DIMENSIONS AND WEIGHT							
	H horizontal installation							
	L - Width	mm	3815	2915	3261	3261	3261	4261
	H - Height	mm	846	846	1171	1171	1171	1171
	P - Depth	mm	868	868	1100	1100	1100	1100
	V vertical installation							
	L - Width	mm	3815	2915	3261	3261	3261	4261
	H - Height	mm	828	828	1034	1034	1034	1034
	P - Depth	mm	470	470	750	750	750	750
	Weight *	Kg	140	149	192	210	216	274

Data at the following conditions:

❶ Outdoor air temperature 35°C D.B., condensation temperature 50°C, desuperheating 25°K. Maximum speed

❷ In open field (Q = 2) at 10 m from the unit.

* Empty weight

	CCAMBY MODEL		2100	2115	2130	2145	2165	2185
	VERSION B "Basic"							
❶	Nominal heating capacity	kW	123,5	135	159	174,5	201	222
❷	Sound pressure	dB(A)	56	56	57	57	58	58
	Cooling circuits	n.	1	1	1	1	1	1
	Fans	no.	3	3	4	4	5	5
	Fan nominal air flow	m³/h	33000	31600	44090	42140	54990	52670
	Rotation speed	rpm	1330	1330	1330	1330	1330	1330
❶	Absorbed power	kW	3,75	3,75	5	5	6,25	6,25
	Electrical supply	V-ph-Hz	400-3-50	400-3-50	400-3-50	400-3-50	400-3-50	400-3-50
	DIMENSIONS AND WEIGHT							
	H horizontal installation							
	L - Width	mm	3261	3261	4261	4261	5261	5261
	H - Height	mm	1171	1171	1171	1171	1171	1171
	P - Depth	mm	1100	1100	1100	1100	1100	1100
	V vertical installation							
	L - Width	mm	3261	3261	4261	4261	5261	5261
	H - Height	mm	1034	1034	1034	1034	1034	1034
	P - Depth	mm	750	750	750	750	750	750
	Weight *	Kg	257	257	310	327	421	451

	CCAMSY MODEL		2100	2115	2130	2145	2165	2185
	VERSION S "Silenced"							
❶	Nominal heating capacity	kW	130,5	135	160	172,5	191	223,5
❷	Sound pressure	dB(A)	51	51	52	53	53	53
	Cooling circuits	n.	1	1	1	1	1	1
	Fans	no.	4	4	4	5	5	6
	Fan nominal air flow	m³/h	33840	33840	34070	45120	42590	51100
	Rotation speed	rpm	890	890	1070	1070	1070	1070
❶	Absorbed power	kW	2,4	2,4	3,36	4,2	4,2	5,04
	Electrical supply	V-ph-Hz	400-3-50	400-3-50	400-3-50	400-3-50	400-3-50	400-3-50
	DIMENSIONS AND WEIGHT							
	H horizontal installation							
	L - Width	mm	4261	4261	4261	5261	5261	6261
	H - Height	mm	1171	1171	1171	1171	1171	1171
	P - Depth	mm	1100	1100	1100	1100	1100	1100
	V vertical installation							
	L - Width	mm	4261	4261	4261	5261	5261	6261
	H - Height	mm	1034	1034	1034	1034	1034	1034
	P - Depth	mm	750	750	750	750	750	750
	Weight *	Kg	302	327	335	421	451	488

	CCAMQY MODEL		2100	2115	2130	2145	2165	2185
	VERSION Q "Super-silenced"							
❶	Nominal heating capacity	kW	125	139	157	181	203	212,5
❷	Sound pressure	dB(A)	45	45	46	50	50	50
	Cooling circuits	n.	1	1	1	1	1	1
	Fans	no.	4	5	5	5	6	6
	Fan nominal air flow	m³/h	24880	33430	31100	39920	50760	47900
	Rotation speed	rpm	690	690	690	890	890	890
❶	Absorbed power	kW	1,6	2	2	3	3,6	3,6
	Electrical supply	V-ph-Hz	400-3-50	400-3-50	400-3-50	400-3-50	400-3-50	400-3-50
	DIMENSIONS AND WEIGHT							
	H horizontal installation							
	L - Width	mm	4261	5261	5261	5261	6261	6261
	H - Height	mm	1171	1171	1171	1171	1171	1171
	P - Depth	mm	1100	1100	1100	1100	1100	1100
	V vertical installation							
	L - Width	mm	4261	5261	5261	5261	6261	6261
	H - Height	mm	1034	1034	1034	1034	1034	1034
	P - Depth	mm	750	750	750	750	750	750
	Weight *	Kg	274	383	383	421	443	450

Data at the following conditions:
❶ Outdoor air temperature 35°C D.B., condensation temperature 50°C, desuperheating 25°K. Maximum speed
❷ In open field (Q = 2) at 10 m from the unit.
* Empty weight

Pumping units

AS 0300÷2500

Pumping units with buffer tank.

KEY FEATURES

- **300 to 2,500 L buffer tank.**
- **Multiple combinations user side electric pumps**
- **Connection to system on delivery or on return**

CONSTRUCTION FEATURES

- Buffer tank: in carbon steel with a capacity of 300, 500, 750, 1,000, 1,500, or 2,500 litres.
- Hydraulic components: single or double centrifugal type electric pump, inlet and delivery ball shut-off valve of each electric pump, automatic replenishment cock, manual replenishment cock, safety valve, automatic air vent valve, tank water drain cock, membrane expansion tank, non-return valve (with double pump only), pressure gauge.
- The water circuit is insulated with closed cell expanded polyurethane of adequate thickness.
- Structure: galvanised and painted steel plate supporting structure.
- Control: electromechanicalÙ

VERSIONS

- AS - Standard version with two connections.

MODELS

- AS 0300 UP or DUP 1-5: pump unit equipped with single user pump (UP) or double user pump (DUP).
- AS 0500 UP or DUP 1-5: pump unit equipped with single user pump (UP) or double user pump (DUP).
- AS 0750 UP or DUP 6-10: pump unit equipped with single user pump (UP) or double user pump (DUP).
- AS 1000 UP or DUP 6-10: pump unit equipped with single user pump (UP) or double user pump (DUP).
- AS 1500 UP or DUP 6-14: pump unit equipped with single user pump (UP) or double user pump (DUP).
- AS 2500 UP or DUP 6-14: pump unit equipped with single user pump (UP) or double user pump (DUP).

FACTORY FITTED ACCESSORIES

- Tank antifreeze electrical resistance complete with activator.

SEPARATELY SUPPLIED ACCESSORIES

- Victaulic fittings.

MODEL		AS 0300	AS 0500	AS 0750	AS 1000	AS 1500	AS 2500
Tank capacity	l	300	500	750	1000	1500	2500
Electric pump model		1-2-3-4-5	1-2-3-4-5	6-7-8-9-10	6-7-8-9-10	6-7-8-9-10-11-12-13-14	6-7-8-9-10-11-12-13-14
Expansion tank capacity	l	25	25	25	25	3X25	3X25
Expansion tank pre-load	bar	1,5	1,5	1,5	1,5	1,5	1,5
Safety valve calibration	bar	3	3	3	3	3	3
Maximum operating pressure	bar	3	3	3	3	3	3
Electrical resistance (optional)	W	1300	1300	1300	1300	1.300X2	1.300X2
Hydraulic connections (female)	Ø (Gas)	21/2"	21/2"	3"	3"	4"	4"
Minimum liquid temperature	°C	-10	-10	-10	-10	-10	-10
Electrical supply	V-pH-Hz	400-3-50	400-3-50	400-3-50	400-3-50	400-3-50	400-3-50
DIMENSIONS AND WEIGHTS		**AS 0300**	**AS 0500**	**AS 0750**	**AS 1000**	**AS 1500**	**AS 2500**
L - Width	mm	1504	1504	2044	2044	2260	2260
H - Height	mm	1265	1265	1510	1510	1782	1782
P - Depth	mm	1120	1120	1200	1200	1900	1900
Weight (*)	kg	194	215	377	400	660	712
Weight (**)	kg	231	253	501	528	878	930

(*) Empty weight with 1 pump
(**) Empty weight with 2 pumps

TANK	PUMP	Electrical supply	Maximum absorbed power	Flow rate	Available head	Flow rate	Available head	Flow rate	Available head
Capacity (l)	Model	V-pH-Hz	kW	m³/h	mh2o	m³/h	mh2o	m³/h	mh2o
300 or 500	1	400-3-50	1.1	12	15,5	15	13,5	18	11,1
300 or 500	2	400-3-50	1.5	12	19	15	17	18	14,7
300 or 500	3	400-3-50	1.5	21	12,4	24	10,8	30	7,5
300 or 500	4	400-3-50	2.2	21	18,2	24	16,6	30	13,3
300 or 500	5	400-3-50	3	21	20,4	24	18,8	30	15,6
750 or 1,000	6	400-3-50	3	36	18,5	42	16,5	48	14
750 or 1,000	7	400-3-50	5.5	42	27	48	25	60	20
750 or 1,000	8	400-3-50	5.5	60	20	72	17	84	12,5
750 or 1,000	9	400-3-50	7.5	72	22	84	18,5	96	14,5
750 or 1,000	10	400-3-50	11	72	31	84	27,5	96	24
1,500 or 2,500	11	400-3-50	15	72	38,5	84	35	96	31
1,500 or 2,500	12	400-3-50	15	108	29	120	27	138	24,5
1,500 or 2,500	13	400-3-50	18.5	108	34	120	32	138	29,5
1,500 or 2,500	14	400-3-50	22	108	40	120	38,5	138	36

Diagram with AS pump unit on delivery

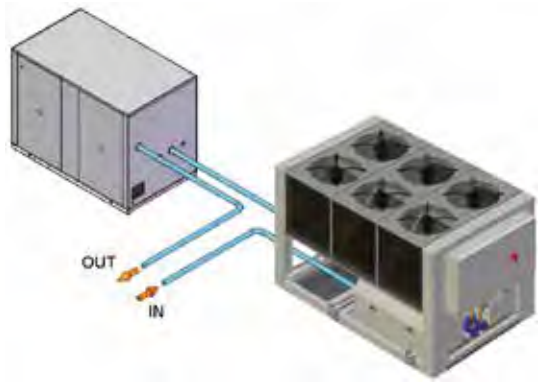

Diagram with AS pump unit on return

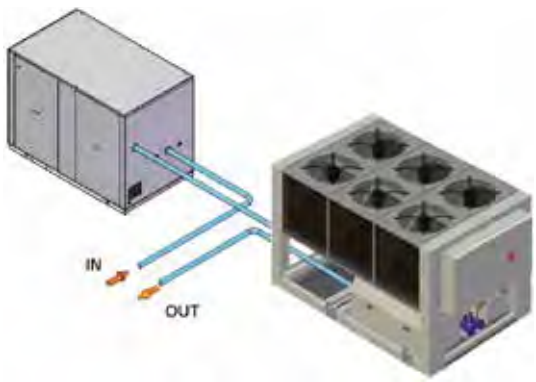

Boilers for domestic hot water

KACS

Capacity DHW: 200-300-500 L

Buffer tanks for the production of domestic hot water from a heat pump.

KEY FEATURES

- **Large exchange surface for heat pump operation**
- **Absolute hygiene**
- **Easy installation**

CONSTRUCTION FEATURES

Boiler with a carbon steel coil, complete with anodic protection, internal treatment of food-grade inorganic glass-porcelain according to DIN 4753-3 and UNI 10025 standards. External insulation in injected rigid polyurethane, 50 mm thick.
Single phase copper immersion electrical resistance (IP 65) with internal adjustable thermostat and temperature limiter.

VERSIONS

- KACSB - Boiler with coil for the production of domestic hot water from the heat pump and supplementary electrical resistance
- KACSS - Two-coil boiler for domestic hot water production from the heat pump and solar panels, with supplementary electrical resistance.

KACS boilers are to be provided together with the Electa-ECO and Electa-ECOS-B heat pumps, as shown in the table

Electa ECO	KACSB 200	KACSB 300	KACSB 500	KACSS 300	KACSS 500
106M	✓	✓	✓	✓	✓
108M	✓	✓	✓	✓	✓
110M	✓	✓	✓	✓	✓
112M	✓	✓	✓	✓	✓
114M		✓	✓	✓	✓
116M			✓		✓

Electa ECOS-B	KACSB 200	KACSB 300	KACSB 500	KACSS 300	KACSS 500
104	✓	✓		✓	
106	✓	✓	✓	✓	✓
108	✓	✓	✓	✓	✓
110	✓	✓	✓	✓	✓

Electa ECOS.2-B	KACSB 200	KACSB 300	KACSB 500	KACSS 300	KACSS 500
114M		✓	✓	✓	✓
116M			✓		✓

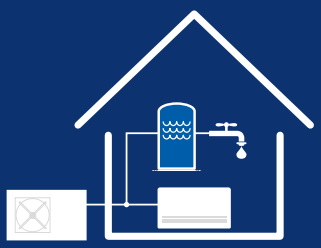

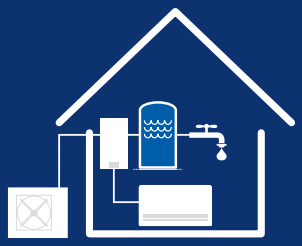

Features

MODEL			KACSB - 200	KACSB - 300	KACSB - 500	KACSS - 300	KACSS - 500
Available volume	l		190	263	470	260	455
Coil surface	m^2		3	4	6	3,7	5,2
Lower coil surface	m^2		-	-	-	1,2	1,8
Coil water content	l		17,2	23	51,5	18	31
Lower coil water content	l		-	-	-	8	10
Maximum pressure on the DHW/coil side	bar		10/10	10/10	10/10	10/10	10/10
Electrical resistance	kW	230-1-50 V	2	3	3	3	3

DIMENSIONS AND WEIGHTS		KACSB - 200	KACSB - 300	KACSB - 500	KACSS - 300	KACSS - 500
Diameter	mm	600	600	750	600	750
Total height	mm	1215	1615	1705	1615	1705
Empty weight	kg	90	124	160	131	182

ENERGY CLASS		KACSB - 200	KACSB - 300	KACSB - 500	KACSS - 300	KACSS - 500
Losses through dispersion	W	67	85	112	85	112
Energy class		C	C	C	C	C

Regulations (EU) No.812/2013 and No.814/2013.

KACSB

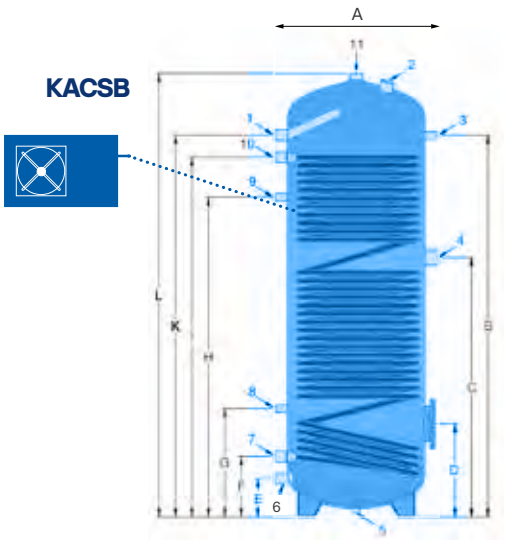

Model	A	B	C	D	E	F	G	H	I	K	L
200	600	995	735	320	140	220	370	835	990	1070	1215
300	600	1390	945	340	140	220	395	1165	1310	1390	1615
500	750	1425	970	370	185	265	425	1170	1325	1415	1705

No.	TYPE OF CONNECTION	MODEL 200 - 300	MODEL 500
1.	Hot water delivery	1"	1"
2.	Anode	1" 1/4	1" 1/4
3.	Thermometer	1/2"	1/2"
4.	Electrical resistance	1" 1/2	1" 1/2
5.	Blind fastening connection	1/2"	1/2"
6.	Cold water inlet	1"	1"
7.	Coil return	1"	1" 1/4
8.	Probe	1/2"	1/2"
9.	Recirculation	1/2"	1/2"
10.	Coil delivery	1"	1" 1/4
11.	Hot water delivery	1" 1/4	1" 1/4

KACSS

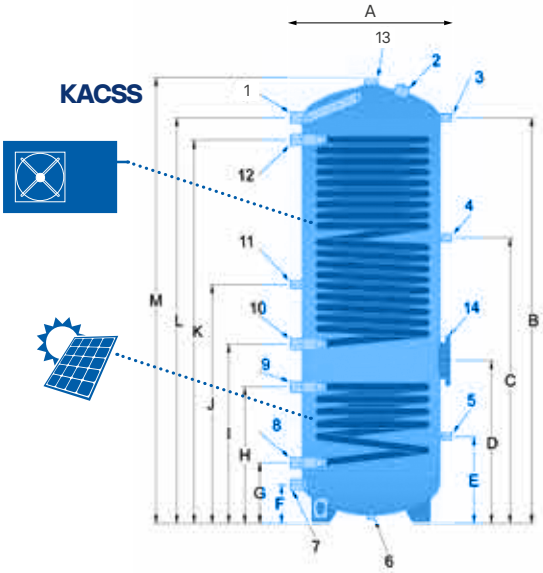

Model	A	B	C	D	E	F	G	H	I	J	K	L	M
300	600	1470	1035	590	315	140	220	495	650	865	1390	1470	1615
500	750	1500	1045	625	320	185	275	525	700	950	1395	1500	1705

No.	TYPE OF CONNECTION	MODEL 300 - 500
1.	Hot water delivery	1" 1/4
2.	Anode	1" 1/4
3.	Thermometer	1/2"
4.	Thermostat	1/2"
5.	Thermostat	1/2"
6.	Blind fastening connection	1/2"
7.	Cold water inlet	1"
8.	Lower coil return	1"
9.	Lower coil delivery	1"
10.	Upper coil return	1"
11.	Recirculation	1/2"
12.	Upper coil delivery	1"
13.	Hot water delivery	1"
14.	Flange with electrical resistance connection	1" 1/2

Thermal flywheel

KSI

Capacity: 25-50-100-200 L

Buffer tanks

KEY FEATURES

- **Long life without corrosion**
- **Easy installation**

CONSTRUCTION FEATURES

KSI – Technical water tank
Tank for heating and cooling water as a thermal flywheel or hydraulic separator, in raw steel painted externally with external insulation in injected rigid polyurethane, 50 mm thick.

MODEL		KSI - 25	KSI - 50	KSI - 100	KSI - 200
Available volume	l	24	58	126	203
Maximum operating pressure	bar	6	6	6	6

DIMENSIONS AND WEIGHTS		KSI - 25	KSI - 50	KSI - 100	KSI - 200
Diameter	mm	380	400	500	550
Total height	mm	455	935	1095	1395
Empty weight	kg	18	25	35	45

ENERGY CLASS		KSI - 25	KSI - 50	KSI - 100	KSI - 200
Losses through dispersion	W	19	34	50	68
Energy class		A	B	B	C

Regulations (EU) No.812/2013 and No.814/2013.

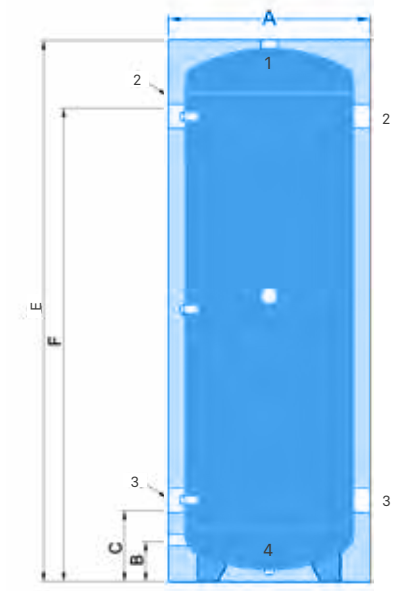

Model	A	B	C	D	E
25	380	80	165	300	455
50	400	100	180	785	935
100	500	100	185	935	1095
200	550	105	215	1200	1395

No.	TYPE OF CONNECTION	MODEL 50-100
1.	Vent	1"
2.	Delivery	1" 1/4
3.	Return	1" 1/4
4.	Drain	1/2"

Fan coils

Fan coils

Floor, ceiling, recessed wall or false ceiling installation

BRIO-I SLIM
Fan coils with EC motor 178

COVER for BRIO-I SLIM
Fan coils with EC motor 180

YARDY-I EV3
Fan coils with EC motor 182

YARDY EV3
Fan coils 184

COVER for YARDY
Fan coils 188

Ducted installation

YARDY-ID2
Ducted fan coils with EC motor 192

YARDY-DUCT2
Ducted fan coils 194

YARDY-HP
Ductable terminals 196

False ceiling boxes

DIVA-I
Cassette fan coils with EC motor 198

DIVA-XLI DIVA-XLI SWING
Cassette fan coils with EC motor 200

DIVA
Cassette fan coils 202

Wall mounting installation

IDROWALL-I
IDROWALL-I/V3
Wall mounted fan coils with EC motor 204

Controls for fan coils

SLIM-Touch 206

LIT-Touch 210

Standard controls 215

Web code: **BRIS1**
Web code accessories: **ACFCS**

BRIO-I SLIM

Fan coils with EC motor

Cooling capacity:
1,0÷4,0 kW

Heating capacity:
1,4÷5,5 kW

Floor and ceiling fan coil units with cabinet for recessed wall or false ceiling installation.

KEY FEATURES

- **Exclusive design with thin profile**
- **Silent operation**
- **Excellent room comfort with continuous regulation of the fan speed**
- **Low consumption with standard EC motor**
- **Versions with cabinet and recessed with front radiant function**
- **Touch control**

CONSTRUCTION FEATURES

- Heat exchanger: finned coil with Eurokonus ¾" connections on the left; connections on the right with accessory supplied separately.
- Tangential fan with constant speed adjustment EC electronic motor and low-consumption micro-fans in the version with radiant function.
- Cabinet version structure: covering cabinet consisting of a painted sheet metal central panel and sides made of ABS polymer (or painted sheet metal for 4T units - 4-pipe systems), RAL9003 colour with matt finish, upper delivery grille in silver grey painted aluminium. Complete unit with vertical condensate drain pan and an additional one with a natural drain, a regenerable filter and fixing brackets.
- Recessed version structure: in galvanised sheet steel, complete with a vertical condensate drain pan and an additional horizontal one with a natural drain, a regenerable filter and fixing brackets.Ù

VERSIONS

- MVP - Vertical unit with cabinet for wall mounting installation or with feet on the ground; ceiling installation with accessory supplied separately (KVXO)
- IXP - Recessed horizontal/vertical unit for wall or false ceiling installation.
- MVR - Vertical only unit with cabinet and front radiant function, for wall mounting installation or with feet on the ground (only unit 2T).
- IVR - Vertical only recessed unit with front radiant function, for wall formwork installation (only unit 2T).

CONSTRUCTION SET-UPS

Type of unit
2T - Single main coil.
4T - Double main coil and additional (MVP and IXP versions only).

ACCESSORIES

➔ Cable for water connections on the right side.
➔ Eurokonus / Gas connection straight fitting.
➔❖ 2 -way ON/OFF electrovalves for 2 and 4-pipe systems.
➔❖ 3 -way ON/OFF electrovalves for 2 and 4-pipe systems.
➔ Condensate drain pan for horizontal installation.
➔ Back in view.
➔ Aesthetic and floor support feet.
➔ Formwork for recessed installation (only 2-pipe systems)
➔ Wall aesthetic panel for formwork, colour matt white RAL 9003.
➔ Ceiling aesthetic panel for formwork, colour matt white RAL 9003.
➔ Straight or 90° inlet fitting.
➔ 90° delivery fitting, insulated.
➔ Telescopic delivery fitting, insulated.
➔ Wall inlet grille made of aluminium, with straight profile.
➔ Wall mounted delivery nozzle made of aluminium, with a double row of adjustable fins.
➔ Ceiling inlet grille made of aluminium, with curved profile.
➔ Ceiling delivery nozzle made of aluminium, with curved profile.

CONTROLS

STANDARD controls
For on board installation
➔ Electronic board in combination with 3-speed thermostats
➔ Electronic board in combination with thermostats with 0-10V analogue output
For wall mounting installation
➔ Panel with room thermostat, summer/winter switch, speed switch and ON/OFF valve control.
➔ Electronic panel with automatic summer/winter switching for 2-pipe systems.

ADVANCED controls
➔ Wall mounting slim-touch control panel in glossy black or pearl white, with RS485 Modbus RTU interface.
For installation on machine
➔❖ Touch control on board and electronic control with continuous speed modulation, with RS485 Modbus RTU interface.
➔❖ Touch control on board and 4-speed electronic control, only for 2-pipe systems.
➔❖ Electronic control with continuous speed modulation only when combined with a KPST panel, with master/slave control up to 31 controls.

Key: ❖ Factory fitted
➔ Supplied separately

Features

	BRIO-I SLIM - MVP-MVR-IXP-IVR					10	20	25	30	40
❶	Total cooling capacity [EN1397]	MAX	kW	E		0,98	1,81	2,87	3,31	3,94
		MED	kW	E		0,75	1,35	2,16	2,43	2,9
		MIN	kW	E		0,38	0,73	1,14	1,27	1,46
❷	Heating capacity (45°C) [EN1397]	MAX	kW	E		1,13	2,03	3,19	3,75	4,46
		MED	kW	E		0,81	1,48	2,32	2,75	3,11
		MIN	kW	E		0,57	0,75	0,92	1,48	1,79
❸	Heating capacity (50°C)	MAX	kW	E		1,39	2,46	3,89	4,51	5,43
		MED	kW	E		1,0	1,75	2,78	3,23	3,73
		MIN	kW	E		0,7	0,84	1,04	1,56	1,87
❹	Heating capacity (70°C) [EN1397]	MAX	kW			2,27	4,08	6,41	7,54	9,17
		MED	kW			1,63	2,98	4,67	5,52	6,42
		MIN	kW			1,16	1,54	1,84	2,97	3,7
❸	Heating capacity only radiant function (50°C) MVR-IVR version		kW			0,32	0,38	0,46	0,55	0,66
❹	Heating capacity only radiant function (70°C) MVR-IVR version		kW			0,54	0,67	0,78	0,92	1,08
❺	Heating capacity of additional coil (65°C) [EN1397]	MAX	kW	E		0,67	1,21	1,76	2,3	2,53
		MED	kW	E		0,56	0,97	1,27	1,81	2,05
		MIN	kW	E		0,33	0,69	0,95	1,31	1,29
❹	Heating capacity of additional coil (70°C) [EN1397]	MAX	kW	E		0,78	1,44	2,18	2,77	2,88
		MED	kW	E		0,64	1,16	1,56	2,2	2,35
		MIN	kW	E		0,37	0,81	1,13	1,59	1,48
	Air flow speed	MAX	m³/h			162	320	461	576	648
		MED	m³/h			113	252	367	453	494
		MIN	m³/h			55	155	248	370	426
	Sound power	MAX	dB(A)	E		50	51	52	54	54
		MED	dB(A)	E		42	43	45	46	46
		MIN	dB(A)	E		32	33	34	35	36
❻	Sound pressure	MAX	dB(A)			41	42	43	45	45
		MED	dB(A)			33	34	36	37	37
		MIN	dB(A)			23	24	25	26	27
	Absorbed power	MAX	W	E		11	19	20	28	35
		MED	W	E		9	10	13	15	17
		MIN	W	E		7	7	7	8	8
	Electrical supply		V-ph-Hz			230-1-50	230-1-50	230-1-50	230-1-50	230-1-50
	DIMENSIONS AND WEIGHTS					**10**	**20**	**25**	**30**	**40**
	W - Width MVP-MVR		mm			723	923	1123	1323	1523
	W - Width IXP-IVR		mm			525	725	925	1125	1325
	H - Height MVP-MVR - 2T		mm			579	579	579	579	579
	H - Height IXP-IVR - 2T		mm			590	590	590	590	590
	H - Height MVP - 4T		mm			639	639	639	639	639
	H - Height IXP - 4T		mm			650	650	650	650	650
	Feet height /minimum height from floor		mm			80	80	80	80	80
	D - MVP-MVR depth		mm			149	149	149	149	149
	D - IXP-IVR depth		mm			126	126	126	126	126
	Weight MVP-MVR - 2T / MVP- 4T		kg			17 / 18	20 / 21	23 / 25	26 / 28	29 / 32
	Weight IXP-IVR - 2T / IXP - 4T		kg			9 / 10	12 / 13	15 / 17	18 / 20	21 / 24
	LxHxD - KCASE - 2T formwork		mm			715x725x142	915x725x142	1115x725x142	1315x725x142	1515x725x142

Data at the following conditions:

❶ Air: 27°C D.B.; 19°C W.B. - Water: 7/12°C.
❷ Air: 20°C - Water: 45/40°C.
❸ Air: 20°C - Water: 50°C, flow rate as in cooling.
❹ Air: 20°C - Water: 70/60°C.
❺ Air: 20°C - Water: 65/55°C.
❻ For room volume equal to 100 m³ and reverberation time = 0.5 sec.
E Eurovent certified performance.

MVP-MVR for vertical installation

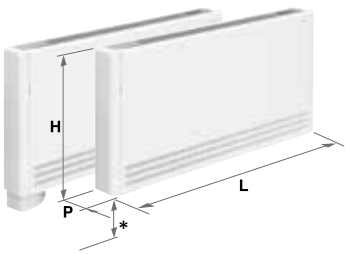

MVP-MVR+feet

* distance from the ground

MVP+KVXO for horizontal installation

IXP for vertical and horizontal installation
IVR for vertical installation

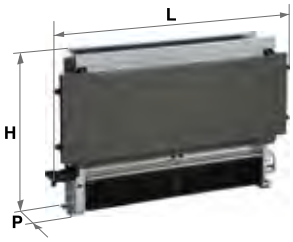

IXP-IVR with KCASE formwork and KPCASEV cover panel

Web code: **BRIS1**
Web code accessories: **ACFCS**

COVER for BRIO-I SLIM

Fan coils with EC motor

Cooling capacity:
1,0÷4,0 kW

Heating capacity:
1,1÷4,6 kW

TOUCH CONTROL

Wall mounted SLIM-Touch panel

KEY FEATURES

- **Concealed fan coil installation**
- **Wall-flush aesthetic cover panel in white RAL 9003**
- **Recessed wall or false ceiling installation**
- **Compact size, only 14 cm thick, also with radiant function.**

Installation solutions with formwork and covering panels on the wall or on the ceiling

BRIO-I SLIM - VERSIONS

- IXP - Recessed horizontal/vertical unit for wall or false ceiling installation.
- IVR - Vertical only recessed unit with front radiant function, for wall formwork installation.

MODELS

Brio-I SLIM: 10, 20, 25, 30, 40

CONSTRUCTION SET-UPS

Type of unit
2T - Single main coil.

ACCESSORIES FOR BRIO COVER

➔ Formwork for recessed installation (only 2-pipe systems)
➔ Wall aesthetic panel for formwork, colour matt white RAL 9003.
➔ Ceiling aesthetic panel for formwork, colour matt white RAL 9003.
➔ Telescopic delivery fitting, insulated.
➔ Wall mounted delivery nozzle made of aluminium, with a double row of adjustable fins.

CONTROLS FOR BRIO COVER

STANDARD controls
For on board installation
➔ Electronic board in combination with 3-speed thermostats
➔ Electronic board in combination with thermostats with 0-10V analogue output
For wall mounting installation
➔ Panel with room thermostat, summer/winter switch, speed switch and ON/OFF valve control.
➔ Electronic panel with automatic summer/winter switching for 2-pipe systems.

ADVANCED controls
➔ Slim-touch wall mounted control panel, with RS485 Modbus RTU interface.
For installation on machine
➔❖ Electronic control with continuous speed modulation only when combined with a wall mounted slim-touch panel, with master/slave control up to 31 controls.
➔❖ RS485 Modbus RTU serial interface

Key:
❖ Factory fitted
➔ Supplied separately

Features

	BRIO-I SLIM - IXP-IVR				10	20	25	30	40
❶	Total cooling capacity [EN1397]	MAX	kW	E	0,98	1,81	2,87	3,31	3,94
		MED	kW	E	0,75	1,35	2,16	2,43	2,9
		MIN	kW	E	0,38	0,73	1,14	1,27	1,46
❷	Heating capacity (45°C) [EN1397]	MAX	kW	E	1,13	2,03	3,19	3,75	4,46
		MED	kW	E	0,81	1,48	2,32	2,75	3,11
		MIN	kW	E	0,57	0,75	0,92	1,48	1,79
❸	Heating capacity (50°C)	MAX	kW	E	1,39	2,46	3,89	4,51	5,43
		MED	kW	E	1,0	1,75	2,78	3,23	3,73
		MIN	kW	E	0,7	0,84	1,04	1,56	1,87
❹	Heating capacity (70°C) [EN1397]	MAX	kW		2,27	4,08	6,41	7,54	9,17
		MED	kW		1,63	2,98	4,67	5,52	6,42
		MIN	kW		1,16	1,54	1,84	2,97	3,7
❸	Heating capacity only radiant function (50°C) MVR-IVR version		kW		0,32	0,38	0,46	0,55	0,66
❹	Heating capacity only radiant function (70°C) MVR-IVR version		kW		0,54	0,67	0,78	0,92	1,08
	Air flow speed	MAX	m³/h		162	320	461	576	648
		MED	m³/h		113	252	367	453	494
		MIN	m³/h		55	155	248	370	426
	Sound power	MAX	dB(A)	E	50	51	52	54	54
		MED	dB(A)	E	42	43	45	46	46
		MIN	dB(A)	E	32	33	34	35	35
❻	Sound pressure	MAX	dB(A)		41	42	43	45	45
		MED	dB(A)		33	34	36	37	37
		MIN	dB(A)		23	24	25	26	26
	Absorbed power	MAX	W	E	11	19	20	28	35
		MED	W	E	9	10	13	15	17
		MIN	W	E	7	7	7	8	8
	Electrical supply		V-ph-Hz		230-1-50	230-1-50	230-1-50	230-1-50	230-1-50
	DIMENSIONS AND WEIGHT				**10**	**20**	**25**	**30**	**40**
	W - Width IXP-IVR - 2T		mm		525	725	925	1125	1325
	H - Height IXP-IVR - 2T		mm		590	590	590	590	590
	D - Depth IXP-IVR- 2T		mm		126	126	126	126	126
	Weight IXP-IVR - 2T		kg		9	12	15	18	21
	COVER for BRIO-I Slim - 2T				**10**	**20**	**25**	**30**	**40**
	KCASE - 2T formwork	WxHxD	mm		715x725x142	915x725x142	1115x725x142	1315x725x142	1515x725x142
	KCASE - 2T formwork	Weight	kg		5	6	7	8	9
	KPCASEV - KPCASEO - 2T panel	WxHxD	mm		775x755x10	975x755x10	1175x755x10	1375x755x10	1575x755x10
	KPCASEV - KPCASEO - 2T panel	Weight	kg		3	3,5	4	4,5	5
	KGMD - 2T delivery nozzle	WxHxD	mm		335x130x6	535x130x6	735x130x6	935x130x6	1135x130x6

Data at the following conditions:

❶ Air: 27°C D.B.; 19°C W.B. - Water: 7/12°C.
❷ Air: 20°C - Water: 45/40°C.
❸ Air: 20°C - Water: 50°C, flow rate as in cooling.
❹ Air: 20°C - Water: 70/60°C.
❻ For room volume equal to 100 m³ and reverberation time = 0.5 sec.
E Eurovent certified performance.

KCASE formwork and KPCASEV cover panel

Web code: **YARI3**
Web code accessories: **ACMEC**
Web code controls: **ACREG**

air'suite

YARDY-I EV3

Fan coils with EC motor

Cooling capacity:
1,9÷8,4 kW

Heating capacity:
2,5÷11,8 kW

TOUCH CONTROL

Panel
LIT-Touch
wall installation
and on board.

LIT-Touch remote control and wall mounting receiver.

Floor and ceiling fan coil units with cabinet for recessed wall or false ceiling installation.

KEY FEATURES

- **New white RAL 9003 for versions with cabinet**
- **New touch controls**
- **Air'Suite biocide filter for healthier and cleaner air in indoor environments**
- **Enhanced performance with 4-row coil**
- **Consumption reduced by 50% with EC motor**
- **Continuous fan speed regulation**

CONSTRUCTION FEATURES

- Heat exchanger: with finned coil with left side connections reversible to the right.
- Centrifugal fan with an inverter controlled electronic brushless motor and continuous speed adjustment.
- Cabinet version structure: covering cabinet in pre-painted sheet steel, RAL9003, complete with a regenerable filter, ABS polymer grilles and a natural condensate drain pan.
- Recessed version structure: in galvanised sheet steel, complete with a natural condensate drain pan and regenerable filter.

VERSIONS

- MVP - Vertical unit with cabinet equipped with lower air inlet and upper delivery for wall mounting installation or with feet on the ground.
- MVT - Vertical unit with cabinet equipped with front air inlet and upper delivery for floor installation.
- MXP - Horizontal/vertical unit with cabinet, equipped with lower air inlet and upper delivery, for ceiling installation, wall mounted or with feet on the ground.
- MXT - Horizontal/vertical unit with cabinet, equipped with front air inlet and upper delivery, for ceiling or floor installation.
- IVP - Recessed vertical unit equipped with lower air inlet and upper delivery for wall mounting installation.
- IVF - Recessed vertical unit equipped with lower air inlet and front delivery for wall mounting installation.
- IXP - Horizontal/vertical unit equipped with lower air inlet and upper delivery for false ceiling or recessed wall installation.

CONSTRUCTION SET-UPS

Type of unit
2T - Single main coil.
4T - Double main coil and additional.

ACCESSORIES

➔❖ Additional water heating coil for 4-pipe systems.
➔❖ Electrical resistance.
➔❖ 2 -way ON/OFF electrovalves for 2 and 4-pipe systems.
➔❖ 3 -way ON/OFF electrovalves for 2 and 4-pipe systems.
➔❖ 4-way ON/OFF electrovalves for 4-pipe systems with single main coil.
➔❖ Auxiliary condensate drain pan.
➔❖ Air'Suite biocide filter.
❖ Electrical box for connection terminal block.
❖ Air inlet flange: Ø10cm or Ø12cm.
➔ Manual damper.
➔ Motorised damper.
➔ Back in view.
➔ Rear closing panel.
➔ Rear closing panel with grille and filter.
➔ Support feet with pipe cover.
➔ Flanged frame for duct connection.
➔ Frame with Air'Suite biocide filter (G2) that can be extracted in any direction.
➔ Delivery straight fitting.
➔ 90° delivery and inlet fitting.
➔ Telescopic outlet/inlet fitting.
➔ Inlet grille with filter.
➔ Delivery grille.
➔ Formwork for recessed wall or false ceiling installation.
➔ Aesthetic panel for wall mounted formwork, with air delivery and return grille.
➔ Aesthetic panel for formwork, with air inlet grille.
➔ Delivery nozzle made of aluminium, with a double row of adjustable fins.
➔ Anti-vibration fitting for delivery/inlet duct connection.
➔ Intake/outlet plenum with round nozzles.

CONTROLS

STANDARD controls
For wall mounting installation
➔ Electronic panel with display and RS485 serial interface, semi-recessed in wall.

Advanced LIT-TOUCH controls
➔ Flush LIT-Touch control panel in glossy black or pearl white for wall mounting installation.
➔ Wall mounted LIT-Touch remote control and receiver with air temperature probe and operation LED.
➔❖ LIT-Touch control with air temperature probe for on board installation.
For on board installation
➔❖ LIT-Touch electronic control for 2-pipe systems, with 2 pipes with electrical resistance or 4 pipes, complete with a minimum water temperature probe, ON/OFF valve control and integrated master/slave function up to a total of 15 units.
➔❖ Additional board with 2 digital outputs that can be configured.
➔❖ On board air temperature probe.
➔❖ RS485 serial board for serial communication with other devices (Modbus RTU protocol).

Key: ❖ Factory fitted
➔ Supplied separately

Features

	YARDY-I EV3 MVP-MVT-MXP-MXT-IVP-IVF-IXP				20	24	30	34	45	48	60	74	80	88
❶	Total cooling capacity [EN1397]	MAX	kW	E	1,86	2,24	2,97	3,37	4,11	4,6	6,28	7,33	7,94	8,4
		MED	kW	E	1,44	1,68	2,33	2,75	3,05	3,49	4,6	5,24	5,87	6,32
		MIN	kW	E	0,75	0,8	1,08	1,34	1,53	1,73	1,78	2,1	2,1	2,25
❷	Heating capacity (45°C) [EN1397]	MAX	kW	E	2,1	2,18	3,27	3,41	4,47	4,65	7,13	7,41	9,67	10,07
		MED	kW	E	1,48	1,57	2,52	2,6	3,13	3,27	5,12	5,31	7,15	7,43
		MIN	kW	E	0,77	0,81	1,2	1,26	1,5	1,57	1,88	1,94	2,63	2,74
❸	Heating capacity (50°C)	MAX	kW	E	2,47	2,6	3,87	4,07	5,3	5,54	8,38	8,81	11,29	11,77
		MED	kW	E	1,77	1,88	2,99	3,14	3,74	3,93	6,07	6,37	8,39	8,75
		MIN	kW	E	0,92	0,97	1,42	1,52	1,81	1,9	2,25	2,36	3,07	3,22
❹	Heating capacity (70°C) [EN1397]	MAX	kW		4,2	4,36	6,56	6,85	8,96	9,31	14,28	14,86	19,35	20,14
		MED	kW		2,98	3,14	5,06	5,26	6,28	6,56	10,3	10,77	14,35	14,91
		MIN	kW		1,56	1,64	2,44	2,56	3,06	3,19	3,87	3,98	5,37	5,6
❺	Heating capacity of additional coil (65°C) [EN1397]	MAX	kW	E	1,95	2,08	2,94	2,8	3,36	3,2	5,64	5,37	6,5	6,17
		MED	kW	E	1,66	1,6	2,34	2,22	2,84	2,7	4,67	4,45	5,39	5,14
		MIN	kW	E	0,87	0,83	1,3	1,23	1,53	1,46	2,17	2,06	2,51	2,4
❹	Heating capacity of additional coil (70°C) [EN1397]	MAX	kW	E	2,21	2,36	3,33	3,17	3,83	3,64	6,38	6,08	7,37	6,98
		MED	kW	E	1,92	1,84	2,65	2,52	3,3	3,15	5,3	5,04	6,12	5,83
		MIN	kW	E	1,01	0,96	1,48	1,41	1,79	1,7	2,5	2,38	2,9	2,76
	Air flow speed	MAX	m³/h		331	331	523	523	645	645	1235	1235	1503	1458
		MED	m³/h		230	230	400	400	450	450	780	780	965	965
		MIN	m³/h		97	97	167	167	198	198	256	256	300	300
	Sound power	MAX	dB(A)	E	48	48	50	50	51	51	62	62	66	66
		MED	dB(A)	E	40	40	43	43	42	42	50	50	56	56
		MIN	dB(A)	E	29	29	29	29	29	29	30	30	32	32
❻	Sound pressure	MAX	dB(A)		39	39	41	41	42	42	53	53	57	57
		MED	dB(A)		31	31	34	34	33	33	41	41	47	47
		MIN	dB(A)		20	20	20	20	20	20	21	21	23	23
	Absorbed power	MAX	W	E	23	25	26	28	39	42	89	95	136	146
		MED	W	E	13	14	15	16	14	15	28	30	52	56
		MIN	W	E	6	6	6	6	7	8	7	7	9	10
	Electrical supply		V-ph-Hz		230-1-50	230-1-50	230-1-50	230-1-50	230-1-50	230-1-50	230-1-50	230-1-50	230-1-50	230-1-50
	DIMENSIONS AND WEIGHT				**20**	**24**	**30**	**34**	**45**	**48**	**60**	**74**	**80**	**88**
	L - MXP-MXT-MVP-MVT width		mm		800	800	1000	1000	1200	1200	1500	1500	1500	1500
	L - IVP-IXP-IVF width		mm		550	550	750	750	950	950	1250	1250	1250	1250
	H - MXP-MXT-MVP-MVT height		mm		570	570	570	570	570	570	570	570	570	570
	H - IVP-IXP-IVF height		mm		545	545	545	545	545	545	545	545	545	545
	MVP-MVT-MXP-MXT Feet height		mm		100	100	100	100	100	100	100	100	100	100
	P - MXP-MXT-MVP-MVT Depth		mm		220	220	220	220	220	220	220	220	220	220
	P - IVP-IXP-IVF Depth		mm		212	212	212	212	212	212	212	212	212	212
	MXP-MXT-MVP-MVT Weight		kg		20	20,5	21	22	28	29	35	36	37	38
	IVP-IXP-IVF Weight		kg		16,5	17	20,5	21,5	25,5	27	34,5	35,5	36,5	37,5

Data at the following conditions:

❶ Air: 27°C D.B.; 19°C W.B. - Water: 7/12°C.
❷ Air: 20°C - Water: 45/40°C.
❸ Air: 20°C - Water: 50°C, flow rate as in cooling.
❹ Air: 20°C - Water: 70/60°C.
❺ Air: 20°C - Water: 65/55°C.
❻ For room volume equal to 100 m³ and reverberation time = 0.5 sec.
E Eurovent certified performance.
Performance refers to the motor's input signal: 10V - 6V - 1V at MAX - MED - MIN speed.
YARDY-I EV3 24 - 34 - 48 - 74 - 88 with oversized 4-row coil.

For the selection with Air'Suite filter, refer to the UP-TO-DATE selection Software.

MXP for horizontal installation

MXT for horizontal installation

MVP-MXP for vertical installation

MVP-MXP+feet

MVT-MXT for vertical installation

IXP for horizontal installation

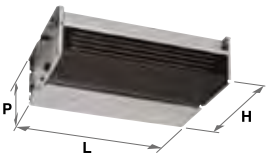

IVP-IXP for vertical installation

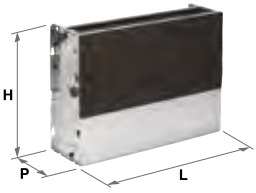

IVF for vertical installation

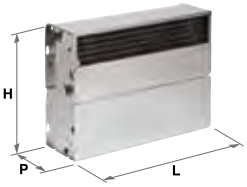

Web code: **YARV3**
Web code accessories: **ACMEC**
Web code controls: **ACREG**

air'suite

YARDY EV3

Fan coils

Cooling capacity:
1,0÷8,3 kW

Heating capacity:
1,4÷11,7 kW

TOUCH CONTROL

Panel
LIT-Touch
wall installation
and on board.

LIT-Touch remote control and wall mounting receiver.

Floor and ceiling fan coil units with cabinet for recessed wall or false ceiling installation.

KEY FEATURES

- **New white RAL 9003 for versions with cabinet**
- **New touch controls**
- **Air'Suite biocide filter for healthier and cleaner air in indoor environments**
- **Enhanced performance with 4-row coil**
- **6-speed fan**
- **Pre-fitted accessories and controls**

CONSTRUCTION FEATURES

- Heat exchanger: with finned coil with left side connections reversible to the right.
- Centrifugal fan: 6 speeds, 3 of which are connected to the terminal block.
- Cabinet version structure: covering cabinet in pre-painted sheet steel, RAL9003, complete with regenerable filter, ABS polymer grilles and natural condensate drain pan.
- Recessed version structure: in galvanised sheet steel, complete with a natural condensate drain pan and regenerable filter.Ù

VERSIONS

- MVP - Vertical unit with cabinet equipped with lower air inlet and upper delivery for wall mounting installation or with feet on the ground.
- MVT - Vertical unit with cabinet equipped with front air inlet and upper delivery for floor installation.
- MXP - Horizontal/vertical unit with cabinet, equipped with lower air inlet and upper delivery, for ceiling installation, wall mounted or with feet on the ground.
- MXT - Horizontal/vertical unit with cabinet, equipped with front air inlet and upper delivery, for ceiling or floor installation.
- IVP - Recessed vertical unit equipped with lower air inlet and upper delivery for wall mounting installation.
- IVF - Recessed vertical unit equipped with lower air inlet and front delivery for wall mounting installation.
- IXP - Horizontal/vertical unit equipped with lower air inlet and upper delivery for false ceiling or recessed wall installation.

CONSTRUCTION SET-UPS

Type of unit
2T - Single main coil.
4T - Double main coil and additional.

ACCESSORIES

➔❖ Additional water heating coil for 4-pipe systems.
➔❖ Electrical resistance.
➔❖2 -way ON/OFF electrovalves for 2 and 4-pipe systems.
➔❖3 -way ON/OFF electrovalves for 2 and 4-pipe systems.
➔❖4-way ON/OFF electrovalves for 4-pipe systems with a single main coil.
➔❖Auxiliary condensate drain pan.
➔❖Air'Suite biocide filter.
❖ Electrical box for connection terminal block.
❖ Air inlet flange: Ø10cm or Ø12cm.
➔ Manual damper.
➔ Motorised damper.
➔ Back in view.
➔ Rear closing panel.
➔ Rear closing panel with grille and filter.
➔ Support feet with pipe cover.
➔ Flanged frame for duct connection.
➔ Frame with Air'Suite biocide filter (G2) that can be extracted in any direction.
➔ Delivery straight fitting.
➔ 90° delivery and inlet fitting.
➔ Telescopic outlet/inlet fitting.
➔ Inlet grille with filter.
➔ Delivery grille.
➔ Formwork for recessed wall or false ceiling installation.
➔ Aesthetic panel for wall mounted formwork, with air delivery and return grille for wall mounting installation.
➔ Aesthetic panel for formwork, with air inlet grille for wall mounting or ceiling installation.
➔ Delivery nozzle made of aluminium, with a double row of adjustable fins.
➔ Anti-vibration fitting for delivery/inlet duct connection.
➔ Intake/outlet plenum with round nozzles.

Features

YARDY EV3 MVP-MVT-MXP-MXT-IVP-IVF-IXP		15	20	24	25	30	34	40	45	48	55	58	60	74	80	88
L - MXP-MXT-MVP-MVT width	mm	700	800	800	1000	1000	1000	1200	1200	1200	1500	1500	1500	1500	1500	1500
L - IVP-IXP-IVF width	mm	450	550	550	750	750	750	950	950	950	1250	1250	1250	1250	1250	1250
H - MXP-MXT-MVP-MVT height	mm	570	570	570	570	570	570	570	570	570	570	570	570	570	570	570
H - IVP-IXP-IVF height	mm	545	545	545	545	545	545	545	545	545	545	545	545	545	545	545
MVP-MVT-MXP-MXT Feet height	mm	100	100	100	100	100	100	100	100	100	100	100	100	100	100	100
P - MXP-MXT-MVP-MVT Depth	mm	220	220	220	220	220	220	220	220	220	220	220	220	220	220	220
P - IVP-IXP-IVF Depth	mm	212	212	212	212	212	212	212	212	212	212	212	212	212	212	212
MXP-MXT-MVP-MVT Weight	kg	16	20	20,5	20	21	22	27	28	29	35	35	35	36	37	38
IVP-IXP-IVF Weight	kg	14,5	16,5	17	20,5	20,5	21,5	24	25,5	27	34,5	34,5	34,5	35,5	36,5	37,5

CONTROLS

STANDARD controls

For wall mounting installation

➔ Panel with speed and summer/winter switch.
➔ Panel with room thermostat, summer/winter switch, speed switch, ON/OFF valve control and electrical resistance.
➔ Minimum temperature thermostat (for installation on machine).
➔ Electronic panel with automatic summer/winter switching for 2-pipe systems.
➔ Electronic panel with automatic summer/winter switching and automatic speed adjustment for 2-pipe systems with electrical resistance or 4-pipe systems.
➔ Electronic panel with display and RS485 serial interface, semi-recessed in wall.

For on board installation (MVP and MVT versions)

➔❖Panel with speed switch.
➔❖Panel with room thermostat, summer/winter switch and speed switch.
➔❖Minimum temperature thermostat.
➔❖Panel with room thermostat, summer/winter switch, speed switch, ON/OFF valve control and electrical resistance.
➔❖Electronic panel with automatic summer/winter switching for 2-pipe systems.
➔❖Electronic panel with automatic summer/winter switching and automatic speed adjustment for 2-pipe systems with electrical resistance or 4-pipe systems.
➔ Interface board to control up to 4 fan coils.

Advanced LIT-TOUCH controls

➔ Flush LIT-Touch control panel in glossy black or pearl white for wall mounting installation.
➔ Wall mounted LIT-Touch remote control and receiver with air temperature probe and operation LED.
➔❖ LIT-Touch control with air temperature probe for on board installation.

For on board installation

➔❖ LIT-Touch electronic control for 2-pipe systems, with 2 pipes with electrical resistance or 4 pipes, complete with minimum water temperature probe, ON/OFF valve control and integrated master/slave function up to a total of 15 units.
➔❖ Additional board with 2 digital outputs that can be configured.
➔❖ On board air temperature probe.
➔❖ RS485 serial board for serial communication with other devices (Modbus RTU protocol).

Key: ❖ Factory fitted
➔ Supplied separately

MXP for horizontal installation

MXT for horizontal installation

MVP-MXP for vertical installation

MVP-MXP+feet

MVT-MXT for vertical installation

IXP for horizontal installation

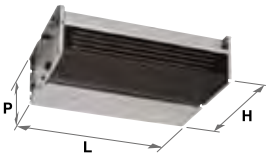

IVP-IXP for vertical installation

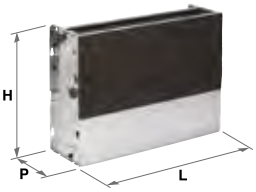

IVF for vertical installation

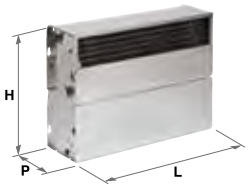

Fan coils
YARDY EV3

YARDY EV3 MVP-MVT-MXP-MXT-IVP-IVF-IXP			15		20		24		25		30		34		40		45	
❶ Total cooling capacity [EN1397]	VI	kW	1,1		1,98		2,2	•E	2,5	•E	3,21		3,28	•E	3,72		4,26	•E
	V	kW	1,04	•E	1,76	•E	2,1		2,24		2,8	•E	3,05		3,36	•E	3,84	
	IV	kW	0,96		1,54		1,87	•E	2,02	•E	2,57		2,81	•E	2,84		3,31	•E
	III	kW	0,89	•E	1,37	•E	1,68		1,69		2,46	•E	2,55		2,63	•E	2,99	
	II	kW	0,76		1,18		1,45	•E	1,62	•E	2,07		2,25	•E	2,47		2,81	
	I	kW	0,64	•E	1,13	•E	1,35		1,38		1,78	•E	1,98		2,06	•E	2,49	•E
❷ Heating capacity (45°C) [EN1397]	VI	kW	1,38		2,26		2,36	•E	2,97	•E	3,59		3,77	•E	4,37		4,68	•E
	V	kW	1,21	•E	1,97	•E	2,04		2,68		3,29	•E	3,45		3,79	•E	4,27	
	IV	kW	1,08		1,62		1,73	•E	2,3	•E	2,85		2,98	•E	3,22		3,47	•E
	III	kW	1,06	•E	1,47	•E	1,52		1,94		2,66	•E	2,79		2,98	•E	3,21	
	II	kW	0,92		1,26		1,44	•E	1,85	•E	2,26		2,35	•E	2,77		2,81	
	I	kW	0,7	•E	1,24	•E	1,27		1,57		2,02	•E	2,2		2,52	•E	2,59	•E
❸ Heating capacity (50°C)	VI	kW	1,59		2,65		2,78	•E	3,47	•E	4,21		4,42	•E	5,11		5,51	•E
	V	kW	1,4	•E	2,31	•E	2,43		3,14		3,85	•E	4,04		4,45	•E	5,03	
	IV	kW	1,25		1,91		2,06	•E	2,71	•E	3,36		3,53	•E	3,79		4,11	•E
	III	kW	1,23	•E	1,74	•E	1,83		2,28		3,14	•E	3,3		3,5	•E	3,79	
	II	kW	1,07		1,49		1,72	•E	2,18	•E	2,67		2,8	•E	3,26		3,35	
	I	kW	0,82	•E	1,46	•E	1,53		1,84		2,37	•E	2,59		2,93	•E	3,08	•E
❹ Heating capacity (70°C) [EN1397]	VI	kW	2,74		4,52		4,71	•	5,94	•	7,17		7,54	•	8,75		9,34	•
	V	kW	2,4	•	3,93	•	4,08		5,37		6,58	•	6,88		7,59	•	8,53	
	IV	kW	2,13		3,23		3,45	•	4,61	•	5,71		5,97	•	6,46		6,93	•
	III	kW	2,11	•	2,95	•	3,06		3,88		5,32	•	5,61		5,96	•	6,4	
	II	kW	1,84		2,54		2,89	•	3,71	•	4,53		4,76	•	5,57		5,63	
	I	kW	1,4	•	2,5	•	2,57		3,15		4,06	•	4,44		5,05	•	5,19	•
❺ Heating capacity of additional coil (65°C) [EN1397]	VI	kW	1,37		2,09		1,78	•E	2,7	•E	3,2		3,05	•E	3,68		3,5	•E
	V	kW	1,14	•E	1,92	•E	1,69		2,61		2,69	•E	2,56		2,94	•E	3,38	
	IV	kW	1,19		1,81		1,46	•E	2,28	•E	2,61		2,48	•E	2,9		2,96	•E
	III	kW	0,96	•E	1,51	•E	1,33		2		2,28	•E	2,17		2,81	•E	2,79	
	II	kW	0,96		1,4		1,2	•E	1,84	•E	2,15		2,04	•E	2,76		2,74	
	I	kW	0,79	•E	1,29	•E	1,16		1,69		1,93	•E	1,83		2,62	•E	2,21	•E
❹ Heating capacity of additional coil (70°C) [EN1397]	VI	kW	1,49		2,37		2,01	•E	3,06	•E	3,62		3,45	•E	4,18		3,98	•E
	V	kW	1,33	•E	2,2	•E	1,93		2,95		3,04	•E	2,9		3,46	•E	3,84	
	IV	kW	1,29		2,09		1,7	•E	2,59	•E	2,95		2,8	•E	3,36		3,46	•E
	III	kW	1,12	•E	1,75	•E	1,56		2,27		2,58	•E	2,46		3,33	•E	3,25	
	II	kW	1,04		1,63		1,4	•E	2,12	•E	2,43		2,31	•E	3,26		3,2	
	I	kW	0,91	•E	1,5	•E	1,34		1,92		2,19	•E	2,06		3,07	•E	2,59	•E
Air flow speed	VI	m³/h	229		339		339	•	484	•	547		547	•	676		681	•
	V	m³/h	209	•	288	•	288		405		483	•	483		587	•	627	
	IV	m³/h	183		238		238	•	339	•	434		434	•	472		474	•
	III	m³/h	163	•	207	•	207		281		383	•	383		419	•	431	
	II	m³/h	138		177		177	•	252	•	329		321	•	390		392	
	I	m³/h	100	•	155	•	155		217		281	•	281		365	•	338	•
Sound power	VI	dB(A)	46		48		48	•E	48	•E	50		50	•E	51		52	•E
	V	dB(A)	43	•E	44	•E	44		42		46	•E	47		48	•E	50	
	IV	dB(A)	40		41		40	•E	38	•E	43		43	•E	43		43	•E
	III	dB(A)	37	•E	38	•E	35		33		40	•E	40		40	•E	41	
	II	dB(A)	32		34		32	•E	30	•E	36		36	•E	38		38	
	I	dB(A)	29	•E	30	•E	31		26		35	•E	34		35	•E	35	•E
❻ Sound pressure	VI	dB(A)	37		39		39	•	39	•	41		41	•	42		43	•
	V	dB(A)	34	•	35	•	35		33		37	•	38		39	•	41	
	IV	dB(A)	31		32		31	•	29	•	34		34	•	34		34	•
	III	dB(A)	28	•	29	•	26		24		31	•	31		31	•	32	
	II	dB(A)	23		25		23	•	21	•	27		27	•	29		29	
	I	dB(A)	20	•	21	•	22		17		26	•	25		26	•	26	•
Absorbed power	VI	W	40		40		41	•E	56	•E	60		65	•E	72		70	•E
	V	W	39	•E	36	•E	32		42		54	•E	58		58	•E	61	
	IV	W	31		25		25	•E	32	•E	36		39	•E	42		41	•E
	III	W	28	•E	23	•E	21		27		31	•E	33		34	•E	36	
	II	W	23		17		16	•E	21	•E	27		27	•E	33		31	
	I	W	17	•E	15	•E	14		20		25	•E	25		28	•E	28	•E
Electrical supply		V-ph-Hz							230-1-50									

Data at the following conditions:

❶ Air: 27°C D.B.; 19°C W.B. - Water: 7/12°C.
❷ Air: 20°C - Water: 45/40°C.
❸ Air: 20°C - Water: 50°C, flow rate as in cooling.
❹ Air: 20°C - Water: 70/60°C.
❺ Air: 20°C - Water: 65/55°C.
❻ For room volume equal to 100 m³ and reverberation time = 0.5 sec.
• Wired speed in terminal block.
E Eurovent certified performance.
Yardy EV3 24 - 34 - 48 - 74 - 88 with oversized 4-row coil.

For the selection with Air'Suite filter, refer to the UP-TO-DATE selection Software.

YARDY EV3 MVP-MVT-MXP-MXT-IVP-IVF-IXP			48		55		58		60		74		80		88	
❶ Total cooling capacity [EN1397]	VI	kW	4,76	•E	5,38	•E	5,9	•E	6,53	•E	6,99	•E	7,82	•E	8,25	•E
	V	kW	4,46		4,86		5,24		6,09		6,48		7,52		7,93	
	IV	kW	3,57	•E	4,4	•E	4,76	•E	5,42	•E	6,01		7,12		7,39	•E
	III	kW	3,35		3,9		4,23		5,26		5,68	•E	6,77	•E	7,32	
	II	kW	3,11		3,34	•E	3,57	•E	4,4		5,05		6,31		6,83	
	I	kW	2,85	•E	2,69		3,03		4,22	•E	4,63	•E	6,24	•E	6,49	•E
❷ Heating capacity (45°C) [EN1397]	VI	kW	4,89	•E	6,13	•E	7,18	•E	7,53	•E	7,89	•E	8,71	•E	10,04	•E
	V	kW	4,45		5,46		6,74		7,04		7,37		8,25		9,61	
	IV	kW	3,64	•E	4,89	•E	5,93	•E	6,2	•E	6,48		8,16		9,12	•E
	III	kW	3,34		4,13		5,81		6,02		6,29	•E	7,8	•E	9	
	II	kW	2,93		3,57	•E	5,12	•E	5,29		5,49		7,12		8,22	
	I	kW	2,69	•E	2,94		4,6		4,71	•E	4,91	•E	7,05	•E	8,15	•E
❸ Heating capacity (50°C)	VI	kW	5,79	•E	7,17	•E	8,34	•E	8,78	•E	9,22	•E	10,19	•E	11,68	•E
	V	kW	5,28		6,39		7,81		8,22		8,63		9,67		11,17	
	IV	kW	4,32	•E	5,74	•E	6,89	•E	7,25	•E	7,61		9,55		10,62	•E
	III	kW	3,98		4,87		6,69		7,04		7,39	•E	9,13	•E	10,49	
	II	kW	3,52		4,22	•E	5,85	•E	6,16		6,47		8,35		9,6	
	I	kW	3,23	•E	3,47		5,24		5,52	•E	5,8	•E	8,27	•E	9,49	•E
❹ Heating capacity (70°C) [EN1397]	VI	kW	9,77	•	12,25	•	14,33	•	15,02	•	15,74	•	17,38	•	20,04	•
	V	kW	8,88		10,9		13,46		14,05		14,72		16,47		19,16	
	IV	kW	7,27	•	9,78	•	11,84	•	12,38	•	12,93		16,31		18,22	•
	III	kW	6,69		8,26		11,61		12,02		12,58	•	15,6	•	17,99	
	II	kW	5,89		7,17	•	10,25	•	10,56		11,06		14,24		16,44	
	I	kW	5,42	•	5,97		9,27		9,45	•	9,95	•	14,1	•	16,29	•
❺ Heating capacity of additional coil (65°C) [EN1397]	VI	kW	3,34	•E	5,46	•E	5,13	•E	5,7	•E	5,45	•E	6,51	•E	6,27	•E
	V	kW	3,22		5,15		5		5,56		5,28		6,46		6,2	
	IV	kW	2,82	•E	4,6	•E	4,68	•E	5,21	•E	4,96		6,36		6,07	•E
	III	kW	2,65		4,27		4,34		4,91		4,62	•E	5,9	•E	5,92	
	II	kW	2,6		3,58	•E	3,72	•E	4,71		3,96		5,7		5,75	
	I	kW	2,15	•E	3,16		3,25		4,22	•E	3,53	•E	5,3	•E	5,28	•E
❹ Heating capacity of additional coil (70°C) [EN1397]	VI	kW	3,79	•E	6,2	•E	5,81	•E	6,45	•E	6,15	•E	7,36	•E	7,08	•E
	V	kW	3,66		5,83		5,66		6,29		5,98		7,31		7,01	
	IV	kW	3,27	•E	5,22	•E	5,3	•E	5,9	•E	5,61		7,2		6,86	•E
	III	kW	3,07		4,84		4,92		5,57		5,23	•E	6,69	•E	6,7	
	II	kW	3,02		4,16	•E	4,25	•E	5,34		4,48		6,46		6,51	
	I	kW	2,53	•E	3,63		3,73		4,78	•E	3,99	•E	6,02	•E	5,98	•E
Air flow speed	VI	m³/h	681	•	1077	•	1077	•	1235	•	1235	•	1480	•	1480	•
	V	m³/h	627		916		916		1109		1109		1388		1388	
	IV	m³/h	474	•	802	•	802	•	948	•	948		1220		1220	•
	III	m³/h	431		662		662		882		882	•	1171	•	1171	
	II	m³/h	392		537	•	537	•	757		757		1031		1031	
	I	m³/h	338	•	420		420		672	•	672	•	994	•	994	•
Sound power	VI	dB(A)	52	•E	58	•E	58	•E	62	•E	62	•E	66	•E	66	•E
	V	dB(A)	50		56		56		60		60		65		65	
	IV	dB(A)	43	•E	52	•E	54	•E	56	•E	56		62		62	•E
	III	dB(A)	41		47		47		54		54	•E	61	•E	61	
	II	dB(A)	38		41	•E	41	•E	50		50		59		59	
	I	dB(A)	35	•E	36		36		48	•E	48	•E	57	•E	57	•E
❻ Sound pressure	VI	dB(A)	43	•	49	•	49	•	53	•	53	•	57	•	57	•
	V	dB(A)	41		47		47		51		51		56		56	
	IV	dB(A)	34	•	43	•	45	•	47	•	47		53		53	•
	III	dB(A)	32		38		38		45		45	•	52	•	52	
	II	dB(A)	29		32	•	32	•	41		41		50		50	
	I	dB(A)	26	•	27		27		39	•	39	•	48	•	48	•
Absorbed power	VI	W	76	•E	115	•E	145	•E	161	•E	172	•E	184	•E	197	•E
	V	W	66		95		122		130		133		173		185	
	IV	W	44	•E	81	•E	102	•E	117	•E	125		142		152	•E
	III	W	39		66		83		109		117	•E	133	•E	142	
	II	W	33		51	•E	64	•E	95		102		124		133	
	I	W	30	•E	41		44		92	•E	98	•E	116	•E	124	•E
Electrical supply		V-ph-Hz							230-1-50							

Data at the following conditions:

❶ Air: 27°C D.B.; 19°C W.B. - Water: 7/12°C.
❷ Air: 20°C - Water: 45/40°C.
❸ Air: 20°C - Water: 50°C, flow rate as in cooling.
❹ Air: 20°C - Water: 70/60°C.
❺ Air: 20°C - Water: 65/55°C.
❻ For room volume equal to 100 m³ and reverberation time = 0.5 sec.
• Wired speed in terminal block.
E Eurovent certified performance.
Yardy EV3 24 - 34 - 48 - 74 - 88 with oversized 4-row coil.

For the selection with Air'Suite filter, refer to the UP-TO-DATE selection Software.

Web code: **YARV3 - YARI3**
Web code accessories: **ACMEC**
Web code controls: **ACREG**

COVER for YARDY

Fan coils

Cooling capacity: 1,8÷4,8 kW

Heating capacity: 2,3÷5,8 kW

TOUCH CONTROL

Panel
Wall mounted LIT-Touch panel.

LIT-Touch remote control and wall mounting receiver.

KEY FEATURES

- **Concealed fan coil installation**
- **Wall-flush aesthetic cover panel in white RAL 9003**
- **Recessed wall or false ceiling installation**

Installation solutions with formwork and covering panels on the wall or on the ceiling

YARDY EV3 AND YARDY-I EV3 - VERSIONS

- IVP - Recessed vertical unit equipped with lower air inlet and upper delivery for wall mounting installation.
- IXP - Horizontal/vertical unit equipped with lower air inlet and upper delivery for false ceiling or recessed wall installation.

YARDY-ID2 AND YARDYDUCT2 - VERSION

- CXP - Ducted recessed unit for horizontal or vertical installation (with lower return and upper delivery).

MODELS

Yardy-I EV3: 20, 24, 30, 34, 45, 48
Yardy EV3: 20, 24, 25, 30, 34, 40, 45, 48
Yardy-ID2: 40, 48
YardyDUCT2: 40, 48

CONSTRUCTION SET-UPS

Type of unit
2T - Single main coil.
4T - Double main coil and additional.

ACCESSORIES FOR YARDY COVER

➔ Formwork for recessed wall or false ceiling installation
➔ Aesthetic panel for wall mounted formwork, colour matt white RAL 9003, with air delivery and return grille for wall mounting installation (IVP and IXP version only).
➔ Aesthetic panel for formwork, colour matt white RAL 9003, with air inlet grille for wall mounting or ceiling installation
➔ Delivery nozzle made of aluminium, with a double row of adjustable fins

CONTROLS FOR YARDY COVER

STANDARD controls
For wall mounting installation
➔ Panel with speed and summer/winter switch.
➔ Panel with room thermostat, summer/winter switch, speed switch, ON/OFF valve control and electrical resistance.
➔ Minimum temperature thermostat (for installation on machine).
➔ Electronic panel with automatic summer/winter switching for 2-pipe systems.
➔ Electronic panel with automatic summer/winter switching and automatic speed adjustment for 2-pipe systems with electrical resistance or 4-pipe systems.
➔ Electronic panel with display and RS485 serial interface, semi-recessed in wall.

Advanced LIT-TOUCH controls
➔ Flush LIT-Touch control panel in glossy black or pearl white for wall mounting installation.
➔ Wall mounted LIT-Touch remote control and receiver with air temperature probe and operation LED.
For on board installation
➔❖ LIT-Touch electronic control for 2-pipe systems, with 2 pipes with electrical resistance or 4 pipes, complete with minimum water temperature probe, ON/OFF valve control and integrated master/slave function up to a total of 15 units.
➔❖ Additional board with 2 digital outputs that can be configured.
➔❖ On board air temperature probe.
➔❖ RS485 serial board for serial communication with other devices (Modbus RTU protocol).

	YARDY-I EV3 IVP-IXP				20	24	30	34	45	48
❶	Total cooling capacity [EN1397]	MAX	kW	E	1,86	2,24	2,97	3,37	4,11	4,6
		MED	kW	E	1,44	1,68	2,33	2,75	3,05	3,49
		MIN	kW	E	0,75	0,8	1,08	1,34	1,53	1,73
❷	Heating capacity (45°C) [EN1397]	MAX	kW	E	2,1	2,18	3,27	3,41	4,47	4,65
		MED	kW	E	1,48	1,57	2,52	2,6	3,13	3,27
		MIN	kW	E	0,77	0,81	1,2	1,26	1,5	1,57
❸	Heating capacity (50°C)	MAX	kW	E	2,47	2,6	3,87	4,07	5,3	5,54
		MED	kW	E	1,77	1,88	2,99	3,14	3,74	3,93
		MIN	kW	E	0,92	0,97	1,42	1,52	1,81	1,9
❹	Heating capacity (70°C) [EN1397]	MAX	kW		4,2	4,36	6,56	6,85	8,96	9,31
		MED	kW		2,98	3,14	5,06	5,26	6,28	6,56
		MIN	kW		1,56	1,64	2,44	2,56	3,06	3,19
❺	Heating capacity of additional coil (65°C) [EN1397]	MAX	kW	E	1,95	2,08	2,94	2,8	3,36	3,2
		MED	kW	E	1,66	1,6	2,34	2,22	2,84	2,7
		MIN	kW	E	0,87	0,83	1,3	1,23	1,53	1,46
❹	Heating capacity of additional coil (70°C) [EN1397]	MAX	kW	E	2,21	2,36	3,33	3,17	3,83	3,64
		MED	kW	E	1,92	1,84	2,65	2,52	3,3	3,15
		MIN	kW	E	1,01	0,96	1,48	1,41	1,79	1,7
	Air flow speed	MAX	m³/h		331	331	523	523	645	645
		MED	m³/h		230	230	400	400	450	450
		MIN	m³/h		97	97	167	167	198	198
	Sound power	MAX	dB(A)	E	48	48	50	50	51	51
		MED	dB(A)	E	40	40	43	43	42	42
		MIN	dB(A)	E	29	29	29	29	29	29
❻	Sound pressure	MAX	dB(A)		39	39	41	41	42	42
		MED	dB(A)		31	31	34	34	33	33
		MIN	dB(A)		20	20	20	20	20	20
	Absorbed power	MAX	W	E	23	25	26	28	39	42
		MED	W	E	13	14	15	16	14	15
		MIN	W	E	6	6	6	6	7	8
	Electrical supply		V-ph-Hz		230-1-50	230-1-50	230-1-50	230-1-50	230-1-50	230-1-50
	DIMENSIONS AND WEIGHT				**20**	**24**	**30**	**34**	**45**	**48**
	L - IVP-IXP Width		mm		550	550	750	750	950	950
	H - IVP-IXP Height		mm		545	545	545	545	545	545
	P - IVP-IXP Depth		mm		212	212	212	212	212	212
	IVP-IXP Weight		kg		16,5	17	20,5	21,5	25,5	27
	COVER for Yardy-I				**20**	**24**	**30**	**34**	**45**	**48**
	KCASE formwork	WxHxD	mm		920x790x225	920x790x225	1125x790x225	1125x790x225	1325x790x225	1325x790x225
	KCASE formwork	Weight	kg		13	13	15	15	17	17
	KPVCASE - KPXCASE panel	WxHxD	mm		975x820x10	975x820x10	1175x820x10	1175x820x10	1375x820x10	1375x820x10
	KPVCASE - KPXCASE panel	Weight	kg		9	9	10	10	11	11
	KGMD delivery nozzle	WxHxD	mm		555x205x6	555x205x6	755x205x6	755x205x6	955x205x6	955x205x6

Data at the following conditions:

❶ Air: 27°C D.B.; 19°C W.B. - Water: 7/12°C.
❷ Air: 20°C - Water: 45/40°C.
❸ Air: 20°C - Water: 50°C, flow rate as in cooling.
❹ Air: 20°C - Water: 70/60°C.
❺ Air: 20°C - Water: 65/55°C.
❻ For room volume equal to 100 m³ and reverberation time = 0.5 sec.
E Eurovent certified performance.
Performance refers to the motor's input signal: 10V - 6V - 1V at MAX - MED - MIN speed.
YARDY-I EV3 24 - 34 - 48 - 74 - 88 with oversized 4-row coil.

For the selection with Air'Suite filter, refer to the UP-TO-DATE selection Software.

KCASE formwork and KPCASEV cover panel

Fan coils

COVER for YARDY

YARDY EV3 IVP-IXP			20	24	25	30	34	40	45	48
❶ Total cooling capacity [EN1397]	VI	kW	1,98	2,2 •E	2,5 •E	3,21	3,28 •E	3,72	4,26 •E	4,76 •
	V	kW	1,76 •E	2,1	2,24	2,8 •E	3,05	3,36 •E	3,84	4,46
	IV	kW	1,54	1,87 •E	2,02 •E	2,57	2,81 •E	2,84	3,31 •E	3,57 •
	III	kW	1,37 •E	1,68	1,69	2,46 •E	2,55	2,63 •E	2,99	3,35
	II	kW	1,18	1,45 •E	1,62 •E	2,07	2,25 •E	2,47	2,81	3,11
	I	kW	1,13 •E	1,35	1,38	1,78 •E	1,98	2,06 •E	2,49 •E	2,85 •
❷ Heating capacity (45°C) [EN1397]	VI	kW	2,26	2,36 •E	2,97 •E	3,59	3,77 •E	4,37	4,68 •E	4,89 •
	V	kW	1,97 •E	2,04	2,68	3,29 •E	3,45	3,79 •E	4,27	4,45
	IV	kW	1,62	1,73 •E	2,3 •E	2,85	2,98 •E	3,22	3,47 •E	3,64 •
	III	kW	1,47 •E	1,52	1,94	2,66 •E	2,79	2,98 •E	3,21	3,34
	II	kW	1,26	1,44 •E	1,85 •E	2,26	2,35 •E	2,77	2,81	2,93
	I	kW	1,24 •E	1,27	1,57	2,02 •E	2,2	2,52 •E	2,59 •E	2,69 •
❸ Heating capacity (50°C)	VI	kW	2,65	2,78 •E	3,47 •E	4,21	4,42 •E	5,11	5,51 •E	5,79 •
	V	kW	2,31 •E	2,43	3,14	3,85 •E	4,04	4,45 •E	5,03	5,28
	IV	kW	1,91	2,06 •E	2,71 •E	3,36	3,53 •E	3,79	4,11 •E	4,32 •
	III	kW	1,74 •E	1,83	2,28	3,14 •E	3,3	3,5 •E	3,79	3,98
	II	kW	1,49	1,72 •E	2,18 •E	2,67	2,8 •E	3,26	3,35	3,52
	I	kW	1,46 •E	1,53	1,84	2,37 •E	2,59	2,93 •E	3,08 •E	3,23 •
❹ Heating capacity (70°C) [EN1397]	VI	kW	4,52	4,71 •	5,94 •	7,17	7,54 •	8,75	9,34 •	9,77
	V	kW	3,93 •	4,08	5,37	6,58 •	6,88	7,59 •	8,53	8,88
	IV	kW	3,23	3,45 •	4,61 •	5,71	5,97 •	6,46	6,93 •	7,27
	III	kW	2,95 •	3,06	3,88	5,32 •	5,61	5,96 •	6,4	6,69
	II	kW	2,54	2,89 •	3,71 •	4,53	4,76 •	5,57	5,63	5,89
	I	kW	2,5 •	2,57	3,15	4,06 •	4,44	5,05 •	5,19 •	5,42
❺ Heating capacity of additional coil (65°C) [EN1397]	VI	kW	2,09	1,78 •E	2,7 •E	3,2	3,05 •E	3,68	3,5 •E	3,34 •
	V	kW	1,92 •E	1,69	2,61	2,69 •E	2,56	2,94 •E	3,38	3,22
	IV	kW	1,81	1,46 •E	2,28 •E	2,61	2,48 •E	2,9	2,96 •E	2,82 •
	III	kW	1,51 •E	1,33	2	2,28 •E	2,17	2,81 •E	2,79	2,65
	II	kW	1,4	1,2 •E	1,84 •E	2,15	2,04 •E	2,76	2,74	2,6
	I	kW	1,29 •E	1,16	1,69	1,93 •E	1,83	2,62 •E	2,21 •E	2,15 •
❹ Heating capacity of additional coil (70°C) [EN1397]	VI	kW	2,37	2,01 •E	3,06 •E	3,62	3,45 •E	4,18	3,98 •E	3,79 •
	V	kW	2,2 •E	1,93	2,95	3,04 •E	2,9	3,46 •E	3,84	3,66
	IV	kW	2,09	1,7 •E	2,59 •E	2,95	2,8 •E	3,36	3,46 •E	3,27 •
	III	kW	1,75 •E	1,56	2,27	2,58 •E	2,46	3,33 •E	3,25	3,07
	II	kW	1,63	1,4 •E	2,12 •E	2,43	2,31 •E	3,26	3,2	3,02
	I	kW	1,5 •E	1,34	1,92	2,19 •E	2,06	3,07 •E	2,59 •E	2,53 •
Air flow speed	VI	m³/h	339	339 •	484 •	547	547 •	676	681 •	681
	V	m³/h	288 •	288	405	483 •	483	587 •	627	627
	IV	m³/h	238	238 •	339 •	434	434 •	472	474 •	474
	III	m³/h	207 •	207	281	383 •	383	419 •	431	431
	II	m³/h	177	177 •	252 •	329	321 •	390	392	392
	I	m³/h	155 •	155	217	281 •	281	365 •	338 •	338
Sound power	VI	dB(A)	48	48 •E	48 •E	50	50 •E	51	52 •E	52 •
	V	dB(A)	44 •E	44	42	46 •E	47	48 •E	50	50
	IV	dB(A)	41	40 •E	38 •E	43	43 •E	43	43 •E	43 •
	III	dB(A)	38 •E	35	33	40 •E	40	40 •E	41	41
	II	dB(A)	34	32 •E	30 •E	36	36 •E	38	38	38
	I	dB(A)	30 •E	31	26	35 •E	34	35 •E	35 •E	35 •
❻ Sound pressure	VI	dB(A)	39	39 •	39 •	41	41 •	42	43 •	43 •
	V	dB(A)	35 •	35	33	37 •	38	39 •	41	41
	IV	dB(A)	32	31 •	29 •	34	34 •	34	34 •	34 •
	III	dB(A)	29 •	26	24	31 •	31	31 •	32	32
	II	dB(A)	25	23 •	21 •	27	27 •	29	29	29
	I	dB(A)	21 •	22	17	26 •	25	26 •	26 •	26 •
Absorbed power	VI	W	40	41 •E	56 •E	60	65 •E	72	70 •E	76 •E
	V	W	36 •E	32	42	54 •E	58	58 •E	61	66
	IV	W	25	25 •E	32 •E	36	39 •E	42	41 •E	44 •E
	III	W	23 •E	21	27	31 •E	33	34 •E	36	39
	II	W	17	16 •E	21 •E	27	27 •E	33	31	33
	I	W	15 •E	14	20	25 •E	25	28 •E	28 •E	30 •E
Electrical supply		V-ph-Hz	230-1-50	230-1-50	230-1-50	230-1-50	230-1-50	230-1-50	230-1-50	230-1-50

Data at the following conditions:

❶ Air: 27°C D.B.; 19°C W.B. - Water: 7/12°C.
❷ Air: 20°C - Water: 45/40°C.
❸ Air: 20°C - Water: 50°C, flow rate as in cooling.
❹ Air: 20°C - Water: 70/60°C.
❺ Air: 20°C - Water: 65/55°C.
❻ For room volume equal to 100 m³ and reverberation time = 0.5 sec.
· Wired speed in terminal block.
E Eurovent certified performance.
Yardy EV3 24 - 34 - 48 - 74 - 88 with oversized 4-row coil.

For the selection with Air'Suite filter, refer to the UP-TO-DATE selection Software.

YARDY EV3 IVP-IXP			20	24	25	30	34	40	45	48
L - IVP-IXP Width		mm	550	550	750	750	750	950	950	950
H - IVP-IXP Height		mm	545	545	545	545	545	545	545	545
P - IVP-IXP Depth		mm	212	212	212	212	212	212	212	212
IVP-IXP Weight		kg	16,5	17	20,5	20,5	21,5	24	25,5	27
COVER for Yardy			**20**	**24**	**25**	**30**	**34**	**40**	**45**	**48**
KCASE formwork	WxHxD	mm	920x790x225	920x790x225	1125x790x225	1125x790x225	1125x790x225	1325x790x225	1325x790x225	1325x790x225
KCASE formwork	Weight	kg	13	13	15	15	15	17	17	17
KPVCASE - KPXCASE panel	WxHxD	mm	975x820x10	975x820x10	1175x820x10	1175x820x10	1175x820x10	1375x820x10	1375x820x10	1375x820x10
KPVCASE - KPXCASE panel	Weight	kg	9	9	10	10	10	11	11	11
KGMD delivery nozzle	WxHxD	mm	555x205x6	555x205x6	755x205x6	755x205x6	755x205x6	955x205x6	955x205x6	955x205x6

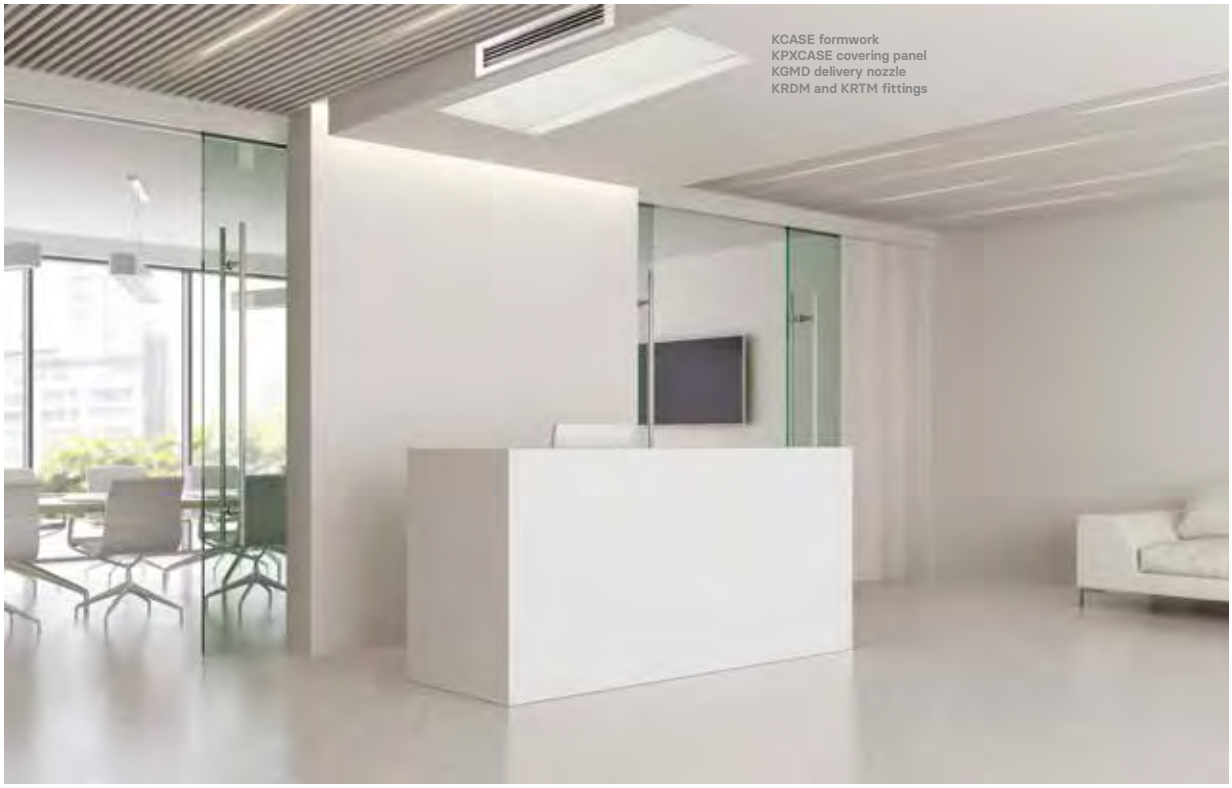

Web code: **YAID2**
Web code accessories: **ACMEC**
Web code controls: **ACREG**

air'suite

YARDY-ID2

Ducted fan coils with EC motor

Cooling capacity:
3,0÷6,3 kW

Heating capacity:
3,9÷8,7 kW

TOUCH CONTROL

Panel
LIT-Touch
wall-mounted.

LIT-Touch remote control and wall mounting receiver.

Ducted fan coils for recessed horizontal or vertical installation.

KEY FEATURES

- **Air'Suite biocide filter for healthier and cleaner air in indoor environments**
- **New touch controls**
- **Enhanced performance with 4-row coil**
- **Consumption reduced by 50% with EC motor**
- **Continuous fan speed regulation**
- **Horizontal and vertical installation**

CONSTRUCTION FEATURES

- Heat exchanger: with finned coil with left side connections reversible to the right.
- Centrifugal fan: with an inverter controlled electronic brushless motor and continuous speed adjustment.
- Structure: made of galvanised sheet steel complete with a natural condensate drain pan and regenerable filter.Ù

VERSIONS

- CXP - Recessed unit for horizontal or vertical installation (with lower return and upper delivery).

CONSTRUCTION SET-UPS

Type of unit
2T - Single main coil
4T - Double main coil and additional

ACCESSORIES

➔❖ Additional water heating coil for 4-pipe systems.
➔❖ Electrical resistance.
➔❖ 2 -way ON/OFF electrovalves for 2 and 4-pipe systems.
➔❖ 3 -way ON/OFF electrovalves for 2 and 4-pipe systems.
➔❖ 4-way ON/OFF electrovalves for 4-pipe systems with single main coil.
➔❖ Auxiliary condensate drain pan.
➔❖ Air'Suite biocide filter.
❖ Electrical box for connection terminal block.
❖ Air inlet flange: Ø10cm or Ø12cm.
➔ Flanged frame for connection to intake or delivery duct.
➔ Frame with Air'Suite biocide filter (G2) that can be extracted in any direction.
➔ Delivery straight fitting.
➔ 90° delivery and inlet fitting.
➔ Telescopic outlet/inlet fitting.
➔ Inlet grille with filter.
➔ Delivery grille.
➔ Formwork for recessed wall or false ceiling installation.
➔ Aesthetic panel for formwork, with air inlet grille for wall mounting or ceiling installation.
➔ Delivery nozzle made of aluminium, with a double row of adjustable fins.
➔ Anti-vibration fitting for delivery/inlet duct connection.
➔ Intake/outlet plenum with round nozzles.

CONTROLS

STANDARD controls
For wall mounting installation
➔ Electronic panel with display and RS485 serial interface, semi-recessed in wall.

Advanced LIT-TOUCH controls
➔ Flush LIT-Touch control panel in glossy black or pearl white for wall mounting installation.
➔ Wall mounted LIT-Touch remote control and receiver with air temperature probe and operation LED.
For on board installation
➔❖ LIT-Touch electronic control for 2-pipe systems, with 2 pipes with electrical resistance or 4 pipes, complete with minimum water temperature probe, ON/OFF valve control and integrated master/slave function up to a total of 15 units.
➔❖ Additional board with 2 digital outputs that can be configured.
➔❖ On board air temperature probe.
➔❖ RS485 serial board for serial communication with other devices (Modbus RTU protocol).

Key: ❖ Factory fitted
➔ Supplied separately

Features

	YARDY-ID2 CXP			40		48		60		74		80		88	
❶	Total cooling capacity [EN1397]	MAX	kW	3,01	E	3,28	E	4,12	E	4,58	E	5,88	E	6,26	E
		MED	kW	2,7	E	2,95	E	3,5	E	4,42	E	5,32	E	5,7	E
		MIN	kW	1,19	E	1,28	E	1,58	E	1,72	E	2,03	E	2,11	E
❷	Heating capacity (45°C) [EN1397]	MAX	kW	3,29	E	3,35	E	4,73	E	4,77	E	7,37	E	7,48	E
		MED	kW	2,93	E	2,97	E	4,53	E	4,48	E	6,6	E	6,71	E
		MIN	kW	1,16	E	1,18	E	1,58	E	1,6	E	2,5	E	2,51	E
❸	Heating capacity (50°C)	MAX	kW	3,86	E	3,94	E	5,52	E	5,63	E	8,55	E	8,72	E
		MED	kW	3,44	E	3,51	E	5,23	E	5,33	E	7,69	E	7,84	E
		MIN	kW	1,39	E	1,42	E	1,9	E	1,94	E	2,92	E	2,98	E
❹	Heating capacity (70°C) [EN1397]	MAX	kW	6,55		6,66		9,44		9,62		14,71		14,93	
		MED	kW	5,84		5,92		9,04		9,1		13,21		13,42	
		MIN	kW	2,35		2,39		3,24		3,27		5,1		5,13	
❺	Heating capacity of additional coil (65°C) [EN1397]	MAX	kW	2,75	E	2,63	E	4,17	E	4,32	E	5,7	E	5,42	E
		MED	kW	2,51	E	2,41	E	4	E	3,7	E	5,1	E	5,02	E
		MIN	kW	1,28	E	1,22	E	1,91	E	1,91	E	2,42	E	2,3	E
❹	Heating capacity of additional coil (70°C) [EN1397]	MAX	kW	3,19	E	3,03	E	4,71	E	4,89	E	6,46	E	6,14	E
		MED	kW	2,92	E	2,78	E	4,51	E	4,18	E	5,78	E	5,69	E
		MIN	kW	1,48	E	1,41	E	2,21	E	2,2	E	2,79	E	2,65	E
	Available static Air flow rate / Pressure	MAX	m³/h / Pa	469 / 64	E	469 / 64	E	737 / 56	E	737 / 56	E	1010 / 65	E	949 / 64	E
		MED	m³/h / Pa	410 / 50	E	410 / 50	E	691 / 50	E	691 / 50	E	866 / 50	E	831 / 50	E
		MIN	m³/h / Pa	150 / 8	E	150 / 8	E	214 / 6	E	214 / 6	E	284 / 7	E	254 / 7	E
❻	Delivery sound power	MAX	dB(A)	56	E	56	E	57	E	57	E	58	E	58	E
		MED	dB(A)	52	E	52	E	56	E	56	E	57	E	57	E
		MIN	dB(A)	30	E	30	E	30	E	30	E	30	E	30	E
❼	Delivery sound pressure	MAX	dB(A)	47		47		48		48		49		49	
		MED	dB(A)	43		43		47		47		48		48	
		MIN	dB(A)	21		21		21		21		21		21	
	Absorbed power	MAX	W	69	E	72	E	100	E	105	E	140	E	140	E
		MED	W	60	E	63	E	80	E	84	E	100	E	100	E
		MIN	W	8	E	8	E	8	E	8	E	13	E	13	E
	Electrical supply		V-ph-Hz	230-1-50		230-1-50		230-1-50		230-1-50		230-1-50		230-1-50	
	DIMENSIONS AND WEIGHTS			**40**		**48**		**60**		**74**		**80**		**88**	
	L - Width		mm	950		950		1250		1250		1250		1250	
	H - Height		mm	545		545		545		545		545		545	
	P - Depth		mm	212		212		212		212		212		212	
	Weight		kg	25,5		26,5		34,5		35,5		36,5		37,5	
	COVER for Yardy-ID2 CXP			**40**		**48**									
	KCASE formwork	WxHxD	mm	1325x790x225		1325x790x225									
	KCASE formwork	Weight	kg	17		17									
	KPXCASE Panel	WxHxD	mm	1375x820x10		1375x820x10									
	KPXCASE Panel	Weight	kg	11		11									
	KGMD delivery nozzle	WxHxD	mm	955x205x6		955x205x6									

Data at the following conditions:

❶ Air: 27°C D.B.; 19°C W.B. - Water: 7/12°C.
❷ Air: 20°C - Water: 45/40°C.
❸ Air: 20°C - Water: 50°C, flow rate as in cooling.
❹ Air: 20°C - Water: 70/60°C.
❺ Air: 20°C - Water: 65/55°C.
❻ According to EN16583
❼ For room volume equal to 100 m³ and reverberation time = 0.5 sec.
E Eurovent certified performance.
Performance refers to the motor's input signal: 10V - 7V - 2V at MAX - MED - MIN speed.
Yardy ID2 48 - 74 - 88 with oversized 4-row coil.

For the selection with Air'Suite filter, refer to the UP-TO-DATE selection Software.

YARDY-ID2 for horizontal and vertical installation

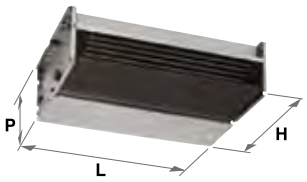

Web code: **YADC2**
Web code accessories: **ACMEC**
Web code controls: **ACREG**

air'suite

YARDY-DUCT2

Ducted fan coils

Cooling capacity: 1,9÷5,7 kW

Heating capacity: 2,4÷7,2 kW

Ducted fan coils for recessed horizontal or vertical installation.

KEY FEATURES

- **Air'Suite biocide filter for healthier and cleaner air in indoor environments**
- **New touch controls**
- **Enhanced performance with 4-row coil**
- **6-speed ductable version**
- **Horizontal and vertical installation**
- **Pre-fitted accessories and controls**

CONSTRUCTION FEATURES

- Heat exchanger: with finned coil with left side connections reversible to the right.
- Centrifugal fan: 6 speeds connected to the terminal block.
- Structure: made of galvanised sheet steel complete with a natural condensate drain pan and regenerable filter.Ù

VERSIONS

- CXP - Recessed unit for horizontal or vertical installation (with lower return and upper delivery).

CONSTRUCTION SET-UPS

Type of unit
2T - Single main coil.
4T - Double main coil and additional.

ACCESSORIES

➔❖ Additional water heating coil for 4-pipe systems.
➔❖ Electrical resistance.
➔❖ 2-way ON/OFF electrovalves for 2 and 4-pipe systems.
➔❖ 3-way ON/OFF electrovalves for 2 and 4-pipe systems.
➔❖ 4-way ON/OFF electrovalves for 4-pipe systems with single main coil.
➔❖ Auxiliary condensate drain pan.
➔❖ Air'Suite biocide filter.
❖ Electrical box for connection terminal block.
❖ Air inlet flange: Ø10cm or Ø12cm.
➔ Flanged frame for connection to intake or delivery duct.
➔ Frame with Air'Suite biocide filter (G2) that can be extracted in any direction.
➔ Delivery straight fitting.
➔ 90° delivery and inlet fitting.
➔ Telescopic outlet/inlet fitting.
➔ Inlet grille with filter.
➔ Delivery grille.
➔ Formwork for recessed wall or false ceiling installation.
➔ Aesthetic panel for formwork, with air inlet grille for wall mounting or ceiling installation.
➔ Delivery nozzle made of aluminium, with a double row of adjustable fins.
➔ Anti-vibration fitting for delivery/inlet duct connection.
➔ Intake/outlet plenum with round nozzles.

CONTROLS

STANDARD controls
For wall mounting installation
➔ Panel with speed and summer/winter switch.
➔ Panel with room thermostat, summer/winter switch, speed switch, ON/OFF valve control and electrical resistance.
➔ Minimum temperature thermostat (for installation on machine).
➔ Electronic panel with automatic summer/winter switching for 2-pipe systems.
➔ Electronic panel with automatic summer/winter switching and automatic speed adjustment for 2-pipe systems with electrical resistance or 4-pipe systems.
➔ Interface board to control up to 4 fan coils (for on board installation).
➔ Electronic panel with display and RS485 serial interface, semi-recessed in wall.

Advanced LIT-TOUCH controls
➔ Flush LIT-Touch control panel in glossy black or pearl white for wall mounting installation.
➔ Wall mounted LIT-Touch remote control and receiver with air temperature probe and operation LED.
For on board installation
➔❖ LIT-Touch electronic control for 2-pipe systems, with 2 pipes with electrical resistance or 4 pipes, complete with a minimum water temperature probe, ON/OFF valve control and integrated master/slave function up to a total of 15 units.
➔❖ Additional board with 2 digital outputs that can be configured.
➔❖ On board air temperature probe.
➔❖ RS485 serial board for serial communication with other devices (Modbus RTU protocol).

Key:
❖ Factory fitted
➔ Supplied separately
* Previous name

Features

YARDY-DUCT2 CXP			40	48	60	74	80	88
❶ Total cooling capacity [EN1397]	VI	kW	1,9 E	2,22 E	3,47 E	4,43 E	4,83 E	5,69 E
	V	kW	1,76 E	2,06 E	3,33	4,26	4,61	5,53
	IV	kW	1,5	1,69	3,18 E	4 E	4,38 E	5,42 E
	III	kW	1,35 E	1,57 E	3,01	3,78	4,17	5,2
	II	kW	1,24	1,44	2,65 E	3,41 E	3,91 E	4,94 E
	I	kW	1,07	1,25	2,42	3,14	3,86	4,8
❷ Heating capacity (45°C) [EN1397]	VI	kW	2,1 E	2,15 E	4,11 E	4,18 E	5,77 E	6,12 E
	V	kW	1,9 E	1,97 E	3,92	3,98	5,62	5,8
	IV	kW	1,53	1,59	3,69 E	3,75 E	5,51 E	5,74 E
	III	kW	1,4 E	1,46 E	3,49	3,54	5,3	5,45
	II	kW	1,27	1,33	3,21 E	3,26 E	4,78 E	5,1 E
	I	kW	1,11	1,16	2,94	2,98	4,61	5,06
❸ Heating capacity (50°C)	VI	kW	2,44 E	2,53 E	4,74 E	4,98 E	6,68 E	7,16 E
	V	kW	2,21 E	2,32 E	4,52	4,75	6,51	6,84
	IV	kW	1,8	1,89	4,29 E	4,5 E	6,37 E	6,76 E
	III	kW	1,65 E	1,73 E	4,05	4,25	6,13	6,44
	II	kW	1,5	1,58	3,7 E	3,89 E	5,53 E	6,04 E
	I	kW	1,3	1,37	3,39	3,56	5,35	5,99
❹ Heating capacity (70°C) [EN1397]	VI	kW	4,18	4,3	8,21	8,5	11,48	12,21
	V	kW	3,78	3,94	7,84	8,1	11,2	11,63
	IV	kW	3,07	3,2	7,44	7,67	10,98	11,52
	III	kW	2,82	2,93	7,04	7,24	10,56	10,98
	II	kW	2,56	2,67	6,48	6,65	9,52	10,32
	I	kW	2,22	2,31	5,95	6,08	9,2	10,26
❺ Heating capacity of additional coil (65°C) [EN1397]	VI	kW	1,97 E	1,87 E	3,78 E	3,6 E	4,64 E	4,42 E
	V	kW	1,84 E	1,75 E	3,75	3,58	4,45	4,24
	IV	kW	1,7	1,61	3,62 E	3,42 E	4,36 E	4,15 E
	III	kW	1,5 E	1,43 E	3,52	3,36	4,25	4,05
	II	kW	1,41	1,34	3,42 E	3,22 E	4,16 E	3,95 E
	I	kW	1,27	1,21	3,32	3,15	4,04	3,85
❹ Heating capacity of additional coil (70°C) [EN1397]	VI	kW	2,29 E	2,18 E	4,27 E	4,07 E	5,24 E	4,99 E
	V	kW	2,14 E	2,04 E	4,24	4,04	5,03	4,79
	IV	kW	1,97	1,87	4,09 E	3,9 E	4,93 E	4,69 E
	III	kW	1,75 E	1,66 E	3,99	3,8	4,81	4,58
	II	kW	1,63	1,55	3,88 E	3,7 E	4,7 E	4,47 E
	I	kW	1,47	1,4	3,8	3,61	4,57	4,35
Available static Air flow rate / Pressure	VI	m³/h	275 / 56 E	275 / 56 E	620 / 66 E	620 / 66 E	912 / 62 E	862 / 62 E
	V	m³/h	250 / 50 E	250 / 50 E	587 / 59	587 / 59	858 / 54	828 / 54
	IV	m³/h	198 / 33	198 / 33	539 / 50 E	539 / 50 E	820 / 50 E	800 / 50 E
	III	m³/h	180 / 19 E	180 / 28 E	504 / 44	504 / 44	772 / 45	759 / 45
	II	m³/h	163 / 16	163 / 24	445 / 34 E	445 / 34 E	715 / 39 E	708 / 39 E
	I	m³/h	140 / 9	140 / 18	402 / 28	402 / 28	685 / 35	680 / 35
❻ Delivery sound power	VI	dB(A)	50 E	50 E	56 E	56 E	57 E	57 E
	V	dB(A)	48 E	48 E	55	55	55	55
	IV	dB(A)	43	43	54 E	54 E	54 E	54 E
	III	dB(A)	42 E	42 E	51	52	53	53
	II	dB(A)	38	38	50 E	50 E	51 E	51 E
	I	dB(A)	37	37	48	46	50	50
❼ Delivery sound pressure	VI	dB(A)	41	41	47	47	48	48
	V	dB(A)	39	39	46	46	46	46
	IV	dB(A)	34	34	45	45	45	45
	III	dB(A)	33	33	42	43	44	44
	II	dB(A)	29	29	41	41	42	42
	I	dB(A)	28	28	39	37	41	41
Absorbed power	VI	W	68 E	71 E	128 E	135 E	154 E	154 E
	V	W	60 E	63 E	120	126	134	134
	IV	W	41	43	91 E	95 E	127 E	127 E
	III	W	36 E	38 E	88	93	109	109
	II	W	32	34	84 E	89 E	105 E	105 E
	I	W	27	28	77	80	91	91
Electrical supply		V-ph-Hz	230-1-50	230-1-50	230-1-50	230-1-50	230-1-50	230-1-50
DIMENSIONS AND WEIGHTS			**40**	**48**	**60**	**74**	**80**	**88**
L - Width		mm	950	950	1250	1250	1250	1250
H - Height		mm	545	545	545	545	545	545
P - Depth		mm	212	212	212	212	212	212
Weight		kg	25,5	27	34,5	35,5	36,5	37,5
COVER for Yardy - DUCT CXP			**40**	**48**				
KCASE formwork	WxHxD	mm	1325x790x225	1325x790x225				
KCASE formwork	Weight	kg	17	17				
KPXCASE Panel	WxHxD	mm	1375x820x10	1375x820x10				
KPXCASE Panel	Weight	kg	11	11				
KGMD delivery nozzle	WxHxD	mm	955x205x6	955x205x0,6				

Data at the following conditions:
❶ Air: 27°C D.B.; 19°C W.B. - Water: 7/12°C.
❷ Air: 20°C - Water: 45/40°C.
❸ Air: 20°C - Water: 50°C, flow rate as in cooling.
❹ Air: 20°C - Water: 70/60°C.
❺ Air: 20°C - Water: 65/55°C.
❻ According to EN16583
❼ For room volume equal to 100 m³ and reverberation time = 0.5 sec.
E Eurovent certified performance.
YARDY-DUCT2 48 - 74 - 88 with oversized 4-row coil.

For the selection with Air'Suite filter, refer to the UP-TO-DATE selection Software.

Web code: **YAHP1**
Web code accessories: **ACMEC**
Web code controls: **ACREG**

air'suite

YARDY-HP

Ductable terminals

Cooling capacity: 7,0÷19,8 kW

Heating capacity: 9,9÷29,6 kW

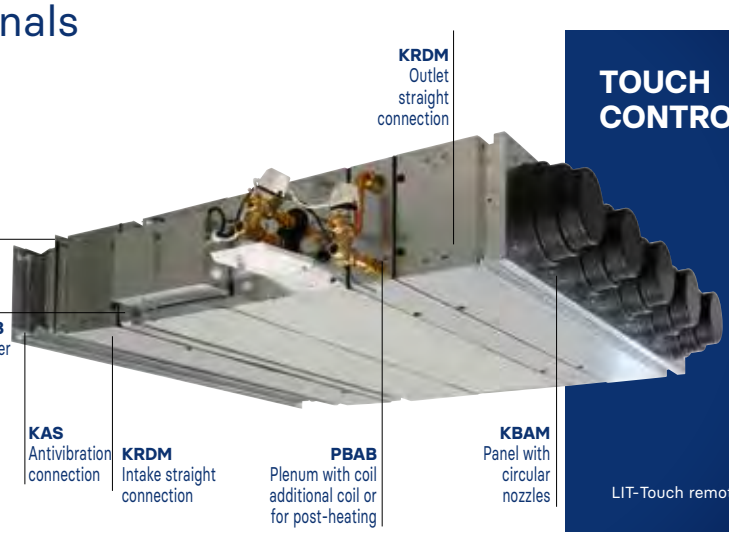

Ductable terminals for recessed horizontal or vertical installation.

KEY FEATURES

- **Air'Suite biocide filter for healthier and cleaner air in indoor environments**
- **New touch controls**
- **Horizontal and vertical installation**
- **Pan removable from below for cleaning**
- **Hydraulic and electric connections on the same side.**
- **Set up with 3, 4, 5-row coil**

CONSTRUCTION FEATURES

- Structure: self-supporting, in galvanised sheet steel for horizontal installation in a false ceiling or vertical recessed wall installation, complete with a natural condensate drain pan, flanges to fit to the inlet/delivery duct. Pan is removable from below.
  Filter supplied separately from the unit.
- Finned coil heat exchanger, removable from below, with connections on the left, reversible to the right directly on site.
- Electrical connection box: on the left, on the same side as the hydraulic connections, reversible to the right directly on site.
- Double intake centrifugal fan with directly coupled 3-speed motor.
  Fan unit is removable from below.Ù

VERSIONS

- CXP - Recessed unit for horizontal or vertical installation (with lower return to upper delivery).

Number of rows

- 3 Rows - Unit with 3-row coil; for recessed horizontal/vertical installation.
- 4 Rows - Unit with 4-row coil; for recessed horizontal/vertical installation.
- 5 Rows - Unit with 5-row coil (only models 250, 300); for recessed horizontal/vertical installation.

CONSTRUCTION SET-UPS

Type of unit

2T - Single main coil
4T - Double main coil and additional

ACCESSORIES

➔❖ Additional water heating coil (1 row) for [4T-KBAA] 4-pipe systems - only for 3R units with a 3-row coil.
➔ External plenum with additional water heating coil for 4-pipe systems [PBAB].
➔❖ 2-way ON/OFF electrovalves for 2 and 4-pipe systems.
➔❖ 3-way ON/OFF electrovalves for 2 and 4-pipe systems.
➔❖ Auxiliary condensate drain pan.
➔ Frame with filter that can be extracted in any direction (G1 or G3).
➔ Frame with Air'Suite biocide filter (G2) that can be extracted in any direction.
➔ Straight delivery and inlet fitting.
➔ 90° delivery and inlet fitting.
➔ Flange for duct connection.
➔ Anti-vibration fitting for connection to the inlet/delivery duct.
➔ Panel with round nozzles to be connected to the delivery/inlet fittings.

CONTROLS

STANDARD controls
For wall mounting installation

➔ Panel with speed and summer/winter switch.
➔ Panel with room thermostat, summer/winter switch, speed switch, ON/OFF valve control and electrical resistance.
➔ Electronic panel with automatic summer/winter switching for 2-pipe systems.
➔ Electronic panel with automatic summer/winter switching and automatic speed adjustment for 2-pipe systems with electrical resistance or 4-pipe systems.
➔ Air probe with remote control option.
➔ Interface board to control up to 4 fan coils (models 100-150-200 only, for on board installation).

Advanced LIT-TOUCH controls

➔ Flush LIT-Touch control panel in glossy black or pearl white for wall mounting installation.
➔ Wall mounted LIT-Touch remote control and receiver with air temperature probe and operation LED.

For on board installation

➔❖ LIT-Touch electronic control for 2-pipe systems, with 2 pipes with electrical resistance or 4 pipes, complete with minimum water temperature probe, ON/OFF valve control and integrated master/slave function up to a total of 15 units.
➔❖ Additional board with 2 digital outputs that can be configured.
➔❖ On board air temperature probe.
➔❖ RS485 serial board for serial communication with other devices (Modbus RTU protocol).

Key: ❖ Factory fitted
➔ Supplied separately

Features

	YARDY HP CXP			100	150	200	250	300
❶	Total cooling capacity [EN1397]	3R MAX	kW	6,96	8,13	9,75	12,85	14,42
		3R MED	kW	6,45	6,49	7,19	9,32	11,15
		3R MIN	kW	5,33	6,19	6,43	6,87	9,82
❷	Heating capacity (45°C) [EN1397]	3R MAX	kW	8,38	10,23	12,58	17,03	19,51
		3R MED	kW	7,61	7,85	8,99	11,62	14,71
		3R MIN	kW	6,08	7,34	7,77	8,09	12,49
❸	Heating capacity (50°C)	3R MAX	kW	9,85	12,09	14,85	20,13	23,11
		3R MED	kW	9	9	10,41	13,64	17,01
		3R MIN	kW	7,27	8,53	9,11	9,64	14,6
❶	Total cooling capacity [EN1397]	4R MAX	kW	8,22	9,28	11,04	15,88	18
		4R MED	kW	7,53	8,09	8,95	11,79	14,31
		4R MIN	kW	6,31	7,61	8,14	8,36	12,52
❷	Heating capacity (45°C) [EN1397]	4R MAX	kW	9,32	10,93	13,34	19,59	22,62
		4R MED	kW	8,35	9,09	10,33	13,9	17,73
		4R MIN	kW	6,83	8,39	9,1	9,27	14,85
❸	Heating capacity (50°C)	4R MAX	kW	11,01	12,88	15,73	23,36	27,12
		4R MED	kW	9,93	10,58	12,11	16,55	20,9
		4R MIN	kW	8,18	9,87	10,79	11,15	17,67
❶	Total cooling capacity [EN1397]	5R MAX	kW	-	-	-	18,04	19,75
		5R MED	kW	-	-	-	12,78	16,32
		5R MIN	kW	-	-	-	8,91	14,04
❷	Heating capacity (45°C) [EN1397]	5R MAX	kW	-	-	-	21,83	24,62
		5R MED	kW	-	-	-	14,42	18,69
		5R MIN	kW	-	-	-	9,37	16,19
❸	Heating capacity (50°C)	5R MAX	kW	-	-	-	26,23	29,62
		5R MED	kW	-	-	-	17,26	22,23
		5R MIN	kW	-	-	-	11,47	19,24
❺	Heating capacity of additional coil (65°C) [EN1397]	4T -KBAA MAX	kW	6,11	6,23	8,63	9,88	10,76
❹	Heating capacity of additional coil (70°C) [EN1397]	4T -KBAA MAX	kW	6,89	7,03	9,73	11,12	12,11
❺	Heating capacity of additional coil (65°C) [EN1397]	PBAB MAX	kW	11,61	12,74	14,87	20,72	22,77
❹	Heating capacity of additional coil (70°C) [EN1397]	PBAB MAX	kW	13,1	14,39	16,78	23,36	25,67
❻	Air flow rate/Speed static pressure (3R)	MAX	m³/h / Pa	1.552 / 60	1.840 / 62	2.339 / 60	3.312 / 60	3.875 / 59
		MED	m³/h / Pa	1.370 / 50	1.620 / 50	1.717 / 50	2.189 / 50	3.075 / 50
		MIN	m³/h / Pa	1.013 / 35	1.432 / 35	1.414 / 35	1.329 / 35	2.415 / 35
❼	Delivery sound power (3R)	MAX	dB(A)	61	62	62	63	68
		MED	dB(A)	59	61	60	59	64
		MIN	dB(A)	56	59	57	55	61
❽	Speed sound pressure (3R)	MAX	dB(A)	47	48	48	49	54
		MED	dB(A)	45	47	46	45	50
		MIN	dB(A)	42	45	43	41	47
	Nominal spd absorbed power MAX	3R	W	200	245	380	680	800
		4R	W	190	230	330	670	750
		5R	W	-	-	-	660	750
	Maximum absorbed power (0 Pa)	3R	W	280	300	500	850	900
	Electrical supply		V-ph-Hz	230-1-50	230-1-50	230-1-50	230-1-50	230-1-50
	DIMENSIONS AND WEIGHTS			**100**	**150**	**200**	**250**	**300**
	L - Width		mm	1295	1295	1295	1295	1295
	H - Height		mm	250	250	285	335	335
	P - YARDY HP Depth		mm	555	555	670	720	720
	P - PBAB Depth		mm	200	200	200	200	200
	YARDY HP Weight		kg	38	38	46	57	57

Data at the following conditions:

❶ Air: 27°C D.B.; 19°C W.B. - Water: 7/12°C.
❷ Air: 20°C - Water: 45/40°C.
❸ Air: 20°C - Water: 50°C, flow rate as in cooling.
❹ Air: 20°C - Water: 70/60°C.
❺ Air: 20°C - Water: 65/55°C.
❻ 3-row coil (3R) without filter.
❼ With G3 filter at the conditions specified in point 6 according to EN16583
❽ At 2 m from the air outflow point with directionality factor 2 and G3 filter.

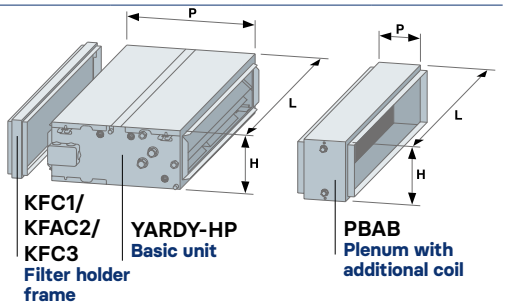

Web code: **DIVI1**
Web code controls: **ACREG**

DIVA-I

Cassette fan coils with EC motor

Cooling capacity:
2,7÷10,7 kW

Heating capacity:
3,4÷12,7 Kw

Cassette-type fan coil units.

KEY FEATURES

- **Consumption reduced by 50% with EC motor**
- **Set-ups for 2 or 4-pipe installations or 2 pipe installations with electrical resistance**
- **ABS or metal ceiling panelling with Coanda effect**
- **New touch controls**
- **2 or 3-way, ON/OFF electrovalves and pre-mounted controls on board**

CONSTRUCTION FEATURES

- Fan coils: cassette-type for installation in false ceilings, with air return and delivery directly in the room.
- Heat exchanger: finned coil.
- Radial fan;
- Inverter brushless EC motor.
- Structure: self-supporting, in galvanised sheet steel complete with an additional condensate drain pan and pump to lift the condensate (maximum head 650 mm).
- PLP buffer ceiling (accessory supplied separately): in ABS polymer (RAL 9003) with manually adjustable delivery fins, return grille and regenerable filter.Ù

CONSTRUCTION SET-UPS

Type of unit
2T - Single main coil
4T - Double main coil and additional
RE - Single main coil and supplementary electrical resistance.

ACCESSORIES

- PLP- ABS ceiling panelling (RAL 9003).
- PLM - Metal ceiling panelling (RAL 9003) flush with false ceiling with Coanda effect.
- ➔❖ 3-way ON/OFF electrovalve for 2 and 4-pipe systems.
- ➔❖ 2-way ON/OFF electrovalves for 2 and 4-pipe systems.
- Primary air duct fitting.
- Circular connector for air distribution at a distance from the unit.
- Primary air kit.

CONTROLS

STANDARD controls
For wall mounting installation
➔ Electronic panel with display and RS485 serial interface, semi-recessed in wall.

Advanced LIT-TOUCH controls
➔ Flush LIT-Touch control panel in glossy black or pearl white for wall mounting installation.
➔ LIT-Touch remote control and receiver for ceiling panelling or wall mounting installation, with air temperature probe and operation LED.
For on board installation
➔❖ LIT-Touch electronic control for 2-pipe systems, with 2 pipes with electrical resistance or 4 pipes, complete with minimum water temperature probe, ON/OFF valve control and integrated master/slave function up to a total of 15 units.
➔ Additional board with 2 digital outputs that can be configured.
➔ On board air temperature probe.
➔ RS485 serial board for serial communication with other devices (Modbus RTU protocol).

Key: ❖ Factory fitted
➔ Supplied separately

KIC - Cover for exposed installation.

PLM - Metal ceiling panelling with Coanda effect.

Features

	DIVA-I 2T - DIVA-I RE				30	40	50	60	110
❶	Total cooling capacity [EN1397]	MAX	kW	E	2,73	4,3	4,96	6,3	10,69
		MED	kW	E	2,16	3,04	3,85	5,13	7,69
		MIN	kW	E	1,84	2,24	2,55	4,2	5,28
❷	Heating capacity (45°C) [EN1397]	MAX	kW	E	2,87	4,36	5,15	6,7	10,56
		MED	kW	E	2,22	2,98	3,85	5,3	7,34
		MIN	kW	E	1,86	2,13	2,46	4,27	4,9
❸	Heating capacity (50°C)	MAX	kW	E	3,44	5,24	6,2	8,01	12,7
		MED	kW	E	2,67	3,58	4,63	6,35	8,83
		MIN	kW	E	2,22	2,55	2,96	5,11	5,89
❹	Heating capacity (70°C) [EN1397]	MAX	kW		5,81	8,81	10,47	13,5	21,34
		MED	kW		4,5	5,99	7,77	10,68	14,75
		MIN	kW		3,75	4,29	4,96	8,57	9,81
	RE electrical resistance	230-1-50 V	kW		-	1,5	2,5	2,5	3
	Air flow speed	MAX	m³/h		535	710	880	1165	1770
		MED	m³/h		380	445	610	870	1130
		MIN	m³/h		310	310	360	630	710
	Sound power	MAX	dB(A)	E	47	54	60	48	57
		MED	dB(A)	E	39	43	50	39	47
		MIN	dB(A)	E	33	33	37	33	34
❻	Sp. sound pressure	MAX	dB(A)		38	45	51	39	48
		MED	dB(A)		30	34	41	30	38
		MIN	dB(A)		24	24	28	24	25
	Absorbed power	MAX	W	E	16	31	62	33	108
		MED	W	E	8	11	21	17	32
		MIN	W	E	5	5	7	10	10
	Electrical supply		V-ph-Hz		230-1-50	230-1-50	230-1-50	230-1-50	230-1-50
	DIMENSIONS AND WEIGHT				**30**	**40**	**50**	**60**	**110**
	Box - Dimensions WxHxD		mm		575 x 275 x 575	575 x 275 x 575	575 x 275 x 575	820 x 303 x 820	820 x 303 x 820
	PLP Ceiling panelling - Dimensions WxHxD		mm		670x 67x 670	670x 67x 670	670x 67x 670	965 x 85 x 965	965 x 85 x 965
	Box - Weight		kg		22	24	24	36	39
	PLP Ceiling panelling - Weight		kg		3	3	3	6	6

	DIVA-I 4T				30	40	50	60	110
❶	Total cooling capacity [EN1397]	MAX	kW	E	2,75	3,9	4,47	6,48	9,76
		MED	kW	E	2,17	2,8	3,51	5,26	7,14
		MIN	kW	E	1,85	2,09	2,37	4,29	4,97
❺	Heating capacity of additional coil (65°C) [EN1397]	MAX	kW	E	3,18	2,91	3,29	8,24	8,33
		MED	kW	E	2,51	2,2	2,66	6,65	6,27
		MIN	kW	E	2,14	1,74	1,92	5,41	4,58
❹	Heating capacity of additional coil (70°C) [EN1397]	MAX	kW	E	3,64	3,38	3,85	9,39	9,62
		MED	kW	E	2,86	2,54	3,08	7,56	7,19
		MIN	kW	E	2,44	1,99	2,21	6,15	5,23
	Air flow speed	MAX	m³/h		535	710	880	1165	1770
		MED	m³/h		380	445	610	870	1130
		MIN	m³/h		310	310	360	630	710
	Sound power	MAX	dB(A)	E	47	54	60	48	57
		MED	dB(A)	E	39	43	50	39	47
		MIN	dB(A)	E	33	33	37	33	34
❻	Sp. sound pressure	MAX	dB(A)		38	45	51	39	48
		MED	dB(A)		30	34	41	30	38
		MIN	dB(A)		24	24	28	24	25
	Absorbed power	MAX	W	E	16	31	62	33	108
		MED	W	E	8	11	21	17	32
		MIN	W	E	5	5	7	10	10
	Electrical supply		V-ph-Hz		230-1-50	230-1-50	230-1-50	230-1-50	230-1-50
	DIMENSIONS AND WEIGHT				**30**	**40**	**50**	**60**	**110**
	Box - Dimensions WxHxD		mm		575 x 275 x 575	575 x 275 x 575	575 x 275 x 575	820 x 303 x 820	820 x 303 x 820
	PLP Ceiling panelling - Dimensions WxHxD		mm		670x 67x 670	670x 67x 670	670x 67x 670	965 x 85 x 965	965 x 85 x 965
	Box - Weight		kg		22	24	24	36	39
	PLP Ceiling panelling - Weight		kg		3	3	3	6	6

Data at the following conditions:
❶ Air: 27°C D.B.; 19°C W.B. - Water: 7/12°C.
❷ Air: 20°C - Water: 45/40°C.
❸ Air: 20°C - Water: 50°C, flow rate as in cooling.
❹ Air: 20°C - Water: 70/60°C.
❺ Air: 20°C - Water: 65/55°C.
❻ For room volume equal to 100 m³ and reverberation time = 0.5 sec.
E Eurovent certified performance.
Performance refers to the motor's input signal: 10V - 5V - 1V at MAX - MED - MIN speed.

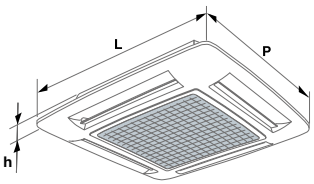

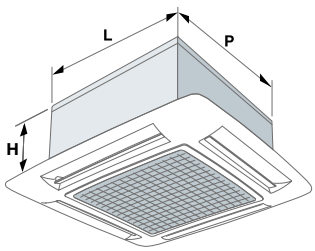

Web code: **DIXI1**
Web code: **DIXS1**
Web code controls: **ACREG**

DIVA-XLI DIVA-XLI SWING

Cassette fan coils with EC motor

Cooling capacity: 12,6-15,1 kW

Heating capacity: 13,4-16,4 kW

DIVA-XLI

DIVA-XLI SWING
Motorized fans and Receiver IR

Cassette-type fan coil units

KEY FEATURES

- **Innovative design for large environments**
- **ABS ceiling panelling with manual or motorised fins and filter option ePM1-55%**
- **Consumption reduced with EC motor**
- **Touch controls**
- **Set-ups for 2-, 4-pipe installations or 2 pipes with electrical resistance**
- **2 or 3-way, ON/OFF electrovalves and pre-mounted controls on board**

CONSTRUCTION FEATURES

- Fan coils: cassette-type for installation in false ceilings, with air return and delivery directly in the room, composed of a buffer ceiling unit.

DIVA-XLI

- Unit complete with:
  - Heat exchanger: finned coil.
  - Radial fan;
  - Inverter brushless EC motor.
  - Structure: self-supporting, in galvanised sheet steel complete with an additional condensate drain pan and pump to lift the condensate (maximum head 650 mm).
- Buffer ceiling (PLP or PLP/PM1 accessory): in ABS polymer (RAL 9003) with manually adjustable delivery fins and return grille.

DIVA-XLI SWING

- Unit complete with:
  - Heat exchanger: finned coil.
  - Radial fan;
  - Inverter brushless EC motor.
  - Structure: self-supporting, in galvanised sheet steel complete with an additional condensate drain pan and pump to lift the condensate (maximum head 650 mm).
  - SWING advanced control for motorised fins integrated in the unit.
- Buffer ceiling (PLP/S or PLP/S/PM1 accessory): in ABS polymer (RAL 9003) with return grille, filter, IR receiver and motorised delivery fins.

CONSTRUCTION SET-UPS

Type of unit

2T - Single main coil
4T - Double main coil and additional
RE - Single main coil and supplementary electrical resistance.

ACCESSORIES

DIVA-XLI

- PLP- ABS Ceiling panelling (RAL 9003), with regenerable filter (G0).
- PLP/PM1 - ABS Ceiling panelling (RAL 9003), with filter ePM1-55% (F7).

DIVA-XLI SWING

- PLP/S- ABS Ceiling panelling (RAL 9003), with motorised fins and regenerable filter (G0).
- PLP/S/PM1- ABS Ceiling panelling (RAL 9003), with motorised fins and filter ePM1-55% (F7).

DIVA-XLI; DIVA-XLI SWING

➔❖ 3-way ON/OFF electrovalve for 2 and 4-pipe systems.
➔❖ 2-way ON/OFF electrovalves for 2 and 4-pipe systems.
- Circular connector for air distribution at a distance from the unit.
- Primary air kit.
- Casing for in view installation.
- 3-way ON/OFF electrovalve for in view casing.

CONTROLS

DIVA-XLI

STANDARD control
For wall mounting installation

➔ Electronic panel with display and RS485 serial interface, semi-recessed in wall.

Advanced LIT-TOUCH controls

➔ Flush LIT-Touch control panel in glossy black or pearl white for wall mounting installation.
➔ LIT-Touch remote control and receiver for ceiling panelling or wall mounting installation, with air temperature probe and operation LED.

For on board installation

➔❖ LIT-Touch electronic control for 2-pipe systems, with 2 pipes with electrical resistance or 4 pipes, complete with minimum water temperature probe, ON/OFF valve control and integrated master/slave function up to a total of 15 units.
➔ Additional board with 2 digital outputs that can be configured.
➔ On board air temperature probe.
➔ RS485 serial board for serial communication with other devices (Modbus RTU protocol).

DIVA-XLI SWING

SWING advanced control for motorised fins integrated in the unit.
➔ Control panel flush with the display.
➔ Remote control.
➔ Wall mounting receiver with probe and LED.

Key: ❖ Factory fitted
➔ Supplied separately

Features

	DIVA-XLI - DIVA-XLI SWING	2T - RE			130	150
❶	Total cooling capacity [EN1397]	MAX	kW	E	12,6	15,13
		MED	kW	E	9,43	11,38
		MIN	kW	E	6,36	7,86
❷	Heating capacity (45°C) [EN1397]	MAX	kW	E	13,39	16,4
		MED	kW	E	9,59	11,86
		MIN	kW	E	6,18	7,82
❸	Heating capacity (50°C)	MAX	kW	E	15,84	19,57
		MED	kW	E	11,42	14,07
		MIN	kW	E	7,39	9,33
❹	Heating capacity (70°C) [EN1397]	MAX	kW		23,45	30,67
		MED	kW		17,02	20,84
		MIN	kW		10,34	13,6
	RE electrical resistance	230-1-50 V, 400-3-50 V	kW		3	3
	Air flow speed	MAX	m³/h		1905	2480
		MED	m³/h		1290	1650
		MIN	m³/h		790	1025
	Sound power	MAX	dB(A)	E	58	64
		MED	dB(A)	E	49	55
		MIN	dB(A)	E	38	44
❻	Sp. sound pressure	MAX	dB(A)		49	55
		MED	dB(A)		40	46
		MIN	dB(A)		29	35
	Absorbed power	MAX	W	E	93	183
		MED	W	E	35	64
		MIN	W	E	13	21
	Electrical supply		V-ph-Hz		230-1-50	230-1-50
	DIMENSIONS AND WEIGHT				**130**	**150**
	Box - Dimensions WxHxD		mm		869 x 304 x 869	869 x 304 x 869
	PLP Ceiling panelling - Dimensions WxHxD		mm		1017 x 91 x 1017	1017 x 91 x 1017
	Box - Weight		kg		42	42
	PLP Ceiling panelling - Weight		kg		7,5	7,5

	DIVA-XLI - DIVA-XLI SWING	4T			130	150
❶	Total cooling capacity [EN1397]	MAX	kW	E	11,61	13,59
		MED	kW	E	8,86	10,59
		MIN	kW	E	6,07	7,45
❺	Heating capacity of additional coil (65°C) [EN1397]	MAX	kW	E	10,55	12,17
		MED	kW	E	8,40	9,80
		MIN	kW	E	6,01	7,19
❹	Heating capacity of additional coil (70°C) [EN1397]	MAX	kW		12,04	13,89
		MED	kW		9,58	11,18
		MIN	kW		6,84	8,20
	Air flow speed	MAX	m³/h		1905	2480
		MED	m³/h		1290	1650
		MIN	m³/h		790	1025
	Sound power	MAX	dB(A)	E	58	64
		MED	dB(A)	E	49	55
		MIN	dB(A)	E	38	44
❻	Sp. sound pressure	MAX	dB(A)		49	55
		MED	dB(A)		40	46
		MIN	dB(A)		29	35
	Absorbed power	MAX	W	E	93	183
		MED	W	E	35	64
		MIN	W	E	13	21
	Electrical supply		V-ph-Hz		230-1-50	230-1-50
	DIMENSIONS AND WEIGHT				**130**	**150**
	Box - Dimensions WxHxD		mm		869 x 304 x 869	869 x 304 x 869
	PLP Ceiling panelling - Dimensions WxHxD		mm		1017 x 91 x 1017	1017 x 91 x 1017
	Box - Weight		kg		42	42
	PLP Ceiling panelling - Weight		kg		7,5	7,5

Data at the following conditions:

❶ Air: 27°C D.B.; 19°C W.B. - Water: 7/12°C.
❷ Air: 20°C - Water: 45/40°C.
❸ Air: 20°C - Water: 50°C, flow rate as in cooling.
❹ Air: 20°C - Water: 70/60°C.
❺ Air: 20°C - Water: 65/55°C.
❻ For room volume equal to 100 m³ and reverberation time = 0.5 sec.
E Eurovent certified performance.
Performance refers to the motor's input signal: 10V - 5V - 1V at MAX - MED - MIN speed.

KIC - Cover for exposed installation.

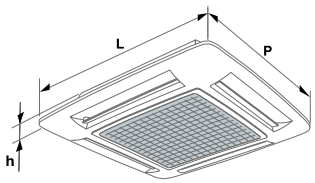

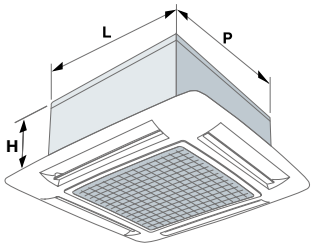

Web code: **DIVA1**
Web code controls: **ACREG**

DIVA

Cassette fan coils

Cooling capacity:
1,9÷10,9 kW

Heating capacity:
2,6÷14,0 kW

Cassette-type fan coil units.

KEY FEATURES

- **Set-ups for 2 or 4-pipe installations or 2 pipe installations with electrical resistance**
- **ABS or metal ceiling panelling with Coanda effect.**
- **New touch controls**
- **2 or 3-way, ON/OFF electrovalves and pre-mounted controls on board**

CONSTRUCTION FEATURES

- Fan coils: cassette-type for installation in false ceilings, with air return and delivery directly in the room.
- Heat exchanger: finned coil.
- Radial fan.
- 6-speed motor, 3 of which are connected in a terminal block.
- Structure: self-supporting, in galvanised sheet steel complete with an additional condensate drain pan and pump to lift the condensate (maximum head 650 mm).
- PLP buffer ceiling (accessory): in ABS polymer (RAL 9003) with manually adjustable delivery fins, return grille and regenerable filter.

CONSTRUCTION SET-UPS

Type of unit
2T - Single main coil
4T - Double main coil and additional
RE - Single main coil and supplementary electrical resistance.

ACCESSORIES

- PLP-ABS ceiling panelling (RAL 9003).
- PLM - Metal ceiling panelling (RAL 9003) flush with false ceiling with Coanda effect.

➔❖ 3-way ON/OFF electrovalve for 2 and 4-pipe systems.
➔❖2-way ON/OFF electrovalves for 2 and 4-pipe systems.

- Primary air duct fitting.
- Circular connector for air distribution at a distance from the unit.
- Primary air kit.

CONTROLS

STANDARD controls
For wall mounting installation
➔ Panel with speed and summer/winter switch.
➔ Panel with room thermostat, summer/winter switch, speed switch, ON/OFF valve control and electrical resistance.
➔ Electronic panel with automatic summer/winter switching for 2-pipe systems.
➔ Electronic panel with automatic summer/winter switching and automatic speed adjustment for 2-pipe systems with electrical resistance or 4-pipe systems.
➔ Electronic panel with display and RS485 serial interface, semi-recessed in wall.
➔ Interface board to control up to 4 fan coils.

Advanced LIT-TOUCH controls
➔ Flush LIT-Touch control panel in glossy black or pearl white for wall mounting installation.
➔ LIT-Touch remote control and receiver for ceiling panelling or wall mounting installation, with air temperature probe and operation LED.
For on board installation
➔❖ LIT-Touch electronic control for 2-pipe systems, with 2 pipes with electrical resistance or 4 pipes, complete with minimum water temperature probe, ON/OFF valve control and integrated master/slave function up to a total of 15 units.
➔ Additional board with 2 digital outputs that can be configured.
➔ On board air temperature probe.
➔ RS485 serial board for serial communication with other devices (Modbus RTU protocol).

Key: ❖ Factory fitted
➔ Supplied separately

KIC - Cover for exposed installation.

PLM - Metal ceiling panelling with Coanda effect.

Features

	DIVA 2T - DIVA RE				20	30	40	50	60	90	110
❶	Total cooling capacity [EN1397]	MAX	kW	E	1,92	2,64	4,26	4,93	6,08	9,39	10,93
		MED	kW	E	1,6	2,31	3,3	3,82	4,86	6,72	8,36
		MIN	kW	E	1,25	1,82	2,23	2,91	4,18	5,27	5,27
❷	Heating capacity (45°C) [EN1397]	MAX	kW	E	2,24	2,8	4,37	5,15	6,5	9,23	11,77
		MED	kW	E	1,8	2,42	3,28	3,85	5,03	6,4	8,56
		MIN	kW	E	1,39	1,86	2,13	2,85	4,27	4,92	5,12
❸	Heating capacity (50°C)	MAX	kW	E	2,64	3,35	5,23	6,17	7,77	10,7	14
		MED	kW	E	2,12	2,9	3,93	4,63	6,03	7,34	10,3
		MIN	kW	E	1,62	2,22	2,56	3,43	5,12	5,61	6,13
❹	Heating capacity (70°C) [EN1397]	MAX	kW		4,13	5,32	8,58	10,29	12,08	15,55	22,63
		MED	kW		2,8	4,37	6,32	7,69	9,29	9,98	17,21
		MIN	kW		2,03	3,24	4,13	5,48	7,19	7,23	9,74
	RE electrical resistance	230-1-50 V	kW		-	1,5	2,5	2,5	3	3	3
	Air flow speed	MAX	m³/h		610	520	710	880	1140	1500	1820
		MED	m³/h		420	420	500	610	820	970	1280
		MIN	m³/h		310	310	320	430	630	710	710
	Sound power	MAX	dB(A)	E	49	45	53	59	48	53	58
		MED	dB(A)	E	40	40	45	49	40	40	48
		MIN	dB(A)	E	33	33	33	41	33	34	34
❻	Sp. sound pressure	MAX	dB(A)		40	36	44	50	39	44	49
		MED	dB(A)		31	31	36	40	31	31	39
		MIN	dB(A)		24	24	24	32	24	25	25
	Absorbed power	MAX	W	E	57	44	68	90	77	120	170
		MED	W	E	32	32	44	57	48	63	95
		MIN	W	E	25	25	25	32	33	42	42
	Electrical supply		V-ph-Hz		230-1-50	230-1-50	230-1-50	230-1-50	230-1-50	230-1-50	230-1-50
	DIMENSIONS AND WEIGHT				20	30	40	50	60	90	110
	Box - Dimensions WxHxD		mm		575 x 275 x 575				820 x 303 x 820		
	PLP Ceiling panelling - Dimensions WxHxD		mm		670x 67x 670				965 x 85 x 965		
	Box - Weight		kg		22	22	24	24	36	39	39
	PLP Ceiling panelling - Weight		kg		3	3	3	3	6	6	6

	DIVA 4T				20	30	32	40	42	50	60	80	90	92	110
❶	Total cooling capacity [EN1397]	MAX	kW	E	2,27	2,66	3,27	3,86	3,72	4,44	6,26	7,59	8,65	8,72	10,03
		MED	kW	E	1,93	2,33	2,61	3,02	2,96	3,47	4,98	5,6	6,27	6,84	7,75
		MIN	kW	E	1,49	1,83	1,83	2,07	2,33	2,69	4,11	4,48	4,95	4,48	4,95
❺	Heating capacity of additional coil (65°C) [EN1397]	MAX	kW	E	2,66	3,04	3,86	2,91	4,19	3,29	8,02	9,66	7,5	11,16	8,58
		MED	kW	E	2,23	2,66	3,04	2,4	3,33	2,66	6,33	7,15	5,63	8,81	6,79
		MIN	kW	E	1,73	2,14	2,14	1,74	2,61	2,14	5,21	5,69	4,59	5,69	4,59
❹	Heating capacity of additional coil (70°C) [EN1397]	MAX	kW	E	3,09	3,5	4,47	3,42	5,04	3,88	9,18	11,12	8,68	12,87	9,97
		MED	kW	E	2,57	3,05	3,5	2,75	4,03	3,12	7,24	8,16	6,48	10,08	7,5
		MIN	kW	E	1,99	2,46	2,46	2,01	3,13	2,49	5,94	6,49	5,27	6,49	5,27
	Air flow speed	MAX	m³/h		610	520	710	710	880	880	1140	1500	1500	1820	1820
		MED	m³/h		420	420	500	500	610	610	820	970	970	1280	1280
		MIN	m³/h		310	310	320	320	430	430	630	710	710	710	710
	Sound power	MAX	dB(A)	E	49	45	53	53	59	59	48	53	53	58	58
		MED	dB(A)	E	40	40	45	45	49	49	40	40	40	48	48
		MIN	dB(A)	E	33	33	33	33	41	41	33	34	34	34	34
❻	Sp. sound pressure	MAX	dB(A)		40	36	44	44	50	50	39	44	44	49	49
		MED	dB(A)		31	31	36	36	40	40	31	31	31	39	39
		MIN	dB(A)		24	24	24	24	32	32	24	25	25	25	25
	Absorbed power	MAX	W	E	57	44	68	68	90	90	77	120	120	170	170
		MED	W	E	32	32	44	44	57	57	48	63	63	95	95
		MIN	W	E	25	25	25	25	32	32	33	42	42	42	42
	Electrical supply		V-ph-Hz		230-1-50	230-1-50	230-1-50	230-1-50	230-1-50	230-1-50	230-1-50	230-1-50	230-1-50	230-1-50	230-1-50
	DIMENSIONS AND WEIGHT				**20**	**30**	**32**	**40**	**42**	**50**	**60**	**80**	**90**	**92**	**110**
	Box - Dimensions WxHxD		mm		575 x 275 x 575							820 x 303 x 820			
	PLP Ceiling panelling - Dimensions WxHxD		mm		670x 67x 670							965 x 85 x 965			
	Box - Weight		kg		24	24	24	24	24	24	39	39	39	39	39
	PLP Ceiling panelling - Weight		kg		3	3	3	3	3	3	6	6	6	6	6

Data at the following conditions:

❶ Air: 27°C D.B.; 19°C W.B. - Water: 7/12°C.
❷ Air: 20°C - Water: 45/40°C.
❸ Air: 20°C - Water: 50°C, flow rate as in cooling.
❹ Air: 20°C - Water: 70/60°C.
❺ Air: 20°C - Water: 65/55°C.
❻ For room volume equal to 100 m³ and reverberation time = 0.5 sec.
E Eurovent certified performance.

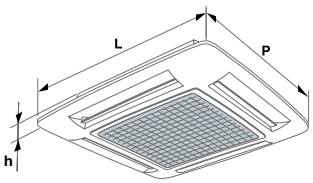

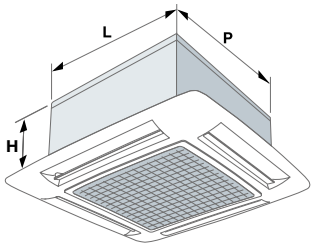

NEW

Web code: **IDR02**
Web code: **IDR01**

IDROWALL-I
IDROWALL-I/V3

Wall mounted fan coils with EC motor

Cooling capacity:
2.2-4.3 kW

Heating capacity:
2.4-5.1 kW

IDROWALL-I

IDROWALL-I/V3

Wall mounted fan coils.

KEY FEATURES

- **Consumption reduced by 50% compared to the traditional motor**
- **New version without on board valve**
- **V3 version with 3-way ON/OFF valve on board**
- **Integrated master/slave function and serial interface**
- **Remote control included**

CONSTRUCTION FEATURES

- Heat exchanger: finned coil.
- Fan: tangential with Inverter Brushless EC motor with continuous speed adjustment.
- Baffle: motorised with different positions.
- Structure: made of heat-resistant ABS polymer, RAL 9003 colour, complete with a regenerable polypropylene filter, adjustable fins and a natural condensate drain pan.
- Control: microprocessor electronic control.

Adjustment functions: full auto (Idrowall-I/V3), cool, dry, fan, autofan, heat.
Comfort functions: orienting, swing, timer, sleep, hot start, memory.
Remote control supplied as standard.
Resident RS485 serial interface.

>IDROWALL-I - Unit complete with backlit temperature display; digital output for mandatory ON/OFF valve control (not supplied) to be installed upstream of the unit; master-slave management of up to 10 units in total, with KPI panel.

>IDROWALL-I/V3 - Unit fitted with 3-way ON/OFF diverter valve, fitted on board; master-slave management of up to 64 units in total; centralised management with KWPCI panel of up to 64 units in total; SYS-TO compatible.

SEPARATELY SUPPLIED ACCESSORIES

- KVAM - Wall mounted recessed box.

>IDROWALL-I/V3

- KV2V - 2-way ON/OFF valve accessory. Assembled on board by the installer.
- K2TF - Accessory for valve use externally to the unit. Assembled by the installer.

CONTROLS SUPPLIED SEPARATELY

>IDROWALL-I

- KPI - Electronic panel flush with display semi-recessed in the wall.

>IDROWALL-I/V3

- KWPI - Electronic panel for wall mounting installation.
- KWPCI - Centralised electronic panel for wall mounting installation Power supply V230-1-50.

L x H x P
102 x 114 x 27 mm

- **Idrowall-I/V3**
  Remote control
  KWPCI centralised panel
  Flush panel KWPI

- **Idrowall-I**
  Remote control
  Flush panel KPI

L x H x P
87 x 87 x 13 mm

Features

					IDROWALL-I				IDROWALL-I/V3		
					20	25	35	45	21	31	41
❶	Total cooling capacity [EN1397]	MAX	kW	E	2,20	2,70	3,60	4,30	1,99	2,95	3,5
		MED	kW	E	1,55	1,90	2,50	3,00	1,63	2,14	2,45
		MIN	kW	E	1,25	1,35	1,90	2,30	1,32	1,89	1,89
❷	Heating capacity (45°C) [EN1397]	MAX	kW	E	2,4	2,9	3,9	4,7	2,68	4,2	4,45
		MED	kW	E	1,7	2,2	2,7	3,4	2,02	3,04	3,63
		MIN	kW	E	1,45	1,55	2	2,5	1,45	2,61	2,61
❸	Heating capacity (50°C)	MAX	kW	E	2,75	3,17	4,29	4,8	3,05	4,78	5,14
		MED	kW	E	1,84	2,26	3,12	3,52	2,34	3,46	4,11
		MIN	kW	E	1,64	1,84	2,25	2,7	1,72	2,98	2,98
	Air flow speed	MAX	m³/h		340	510	680	850	556	722	814
		MED	m³/h		255	382	510	637	413	473	581
		MIN	m³/h		170	255	340	425	295	396	396
	Sound power	MAX	dB(A)	E	48	52	59	62	52	55	59
		MED	dB(A)	E	39	44	51	53	43	46	51
		MIN	dB(A)	E	37	38	43	45	34	42	42
❹	Sound pressure	MAX	dB(A)		39	43	50	53	43	46	50
		MED	dB(A)		30	35	42	44	34	37	42
		MIN	dB(A)		28	29	34	36	25	33	33
	Absorbed power	MAX	W	E	12	18	29	43	22	27	38
		MED	W	E	9	11	16	20	14	15	19
		MIN	W	E	8	8	11	12	11	12	12
	Electrical supply		V-ph-Hz		230-1-50	230-1-50	230-1-50	230-1-50	230-1-50	230-1-50	230-1-50
	DIMENSIONS AND WEIGHTS				**20**	**25**	**35**	**45**	**21**	**31**	**41**
	L - Width		mm		845	845	845	970	795	990	990
	H - Height		mm		289	289	289	300	290	290	290
	P - Depth		mm		209	209	209	224	230	230	230
	Weight		kg		10,5	10,5	10,5	12,5	9,3	11,6	11,6

Data at the following conditions:

❶ Air: 27°C D.B.; 19°C W.B. - Water: 7/12°C.
❷ Air: 20°C - Water: 45/40°C.
❸ Air: 20°C - Water: 50°C, flow rate as in cooling.
❹ For room volume equal to 100 m³ and reverberation time = 0.5 sec.
E Eurovent certificate performance.

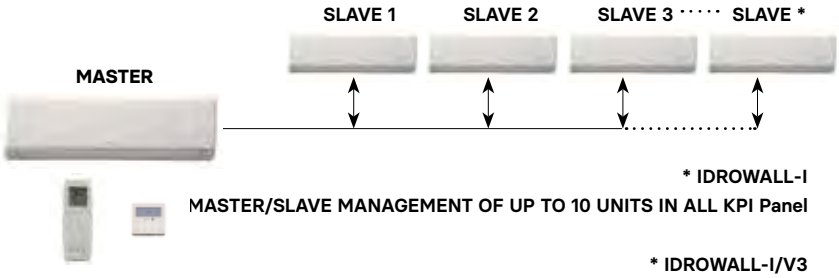

*** IDROWALL-I**

MASTER/SLAVE MANAGEMENT OF UP TO 10 UNITS IN ALL KPI Panel

*** IDROWALL-I/V3**

MASTER/SLAVE MANAGEMENT OF UP TO 64 UNITS IN ALL KWPI Remote Control and Panel

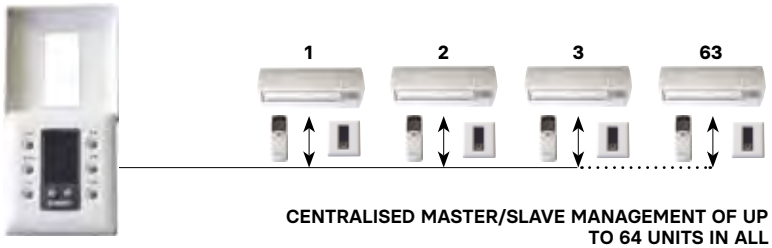

CENTRALISED MASTER/SLAVE MANAGEMENT OF UP TO 64 UNITS IN ALL KWPCI Centralised Panel

SLIM-Touch

Ideal climate with a simple touch

The electronic control with touch interface can provide the right conditions at any time of the day, particularly during the night as there is a super-minimum speed

to guarantee the appropriate level of acoustic comfort for sleep.

The elegant and slim touch interface is available for wall mounting installation or on-board unit mounting.

Master/slave function

31 units in total
Maximum distance: 100m

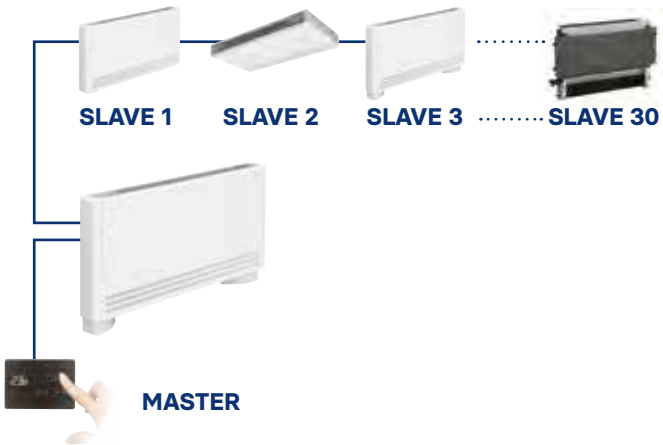

23.0
A
AUTO

SLIM-Touch

Electronic controls for Brio-I Slim fan coils

ADVANCED SLIM-TOUCH CONTROLS

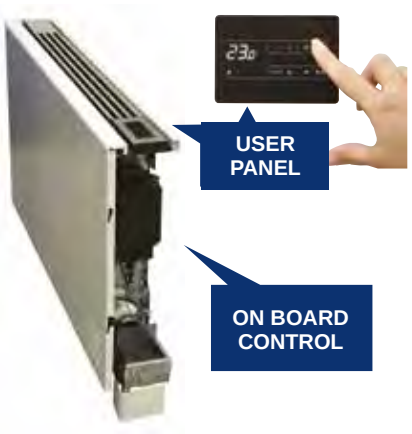

		RANGE	BRIO-I SLIM			
		USER PANEL	ON BOARD CONTROL	ON BOARD CONTROL	WALL MOUNTED PANEL	/
		TYPE	B	B	KPSTB o KPSTW	/
						No user panel
			4 speeds	4 speeds + continuous modulation	4 speeds + continuous modulation	4 speeds + continuous modulation
		Master/ Slave Function	/	/	◆ MASTER	◆ SLAVE
	ADDITIONAL COMPONENTS ON BOARD CONTROL	Supply		↓	↓	↓	↓
SLIM-TOUCH CONTROL	Electronic control for 2-pipe systems	Factory fitted		CS.F/B	CS.M/B	CS.M/P + KPSTB / KPSTW	CS.M/P
		Supplied separately		KCS.F/B	KCS.M/B	KCS.M/P + KPSTB / KPSTW	KCS.M/P
	Electronic control for 4-pipe systems	Factory fitted		/	CS.M/B	CS.M/P + KPSTB / KPSTW	CS.M/P
		Supplied separately		/	KCS.M/B	KCS.M/P + KPSTB / KPSTW	KCS.M/P
	ADDITIONAL COMPONENTS: Air temperature probe installed on the unit	Factory fitted		AS STANDARD		/	
	ADDITIONAL COMPONENTS: RS485 Modbus RTU serial board	Factory fitted		/	AS STANDARD	AS STANDARD	/

Air temperature probe on the wall-mounted control panel or installed on the unit; water temperature probe always installed.
Controls installed on the right side of the unit; the KDX accessory is required for installations on the top left side.

For the unit to operate, it is compulsory to use it with a standard or advanced control.

STANDARD CONTROLS

BRIO-I SLIM	STANDARD CONTROLS	Board installed on board for 3-speed thermostats, for 2-pipe and 4-pipe systems	Supplied separately		KBS.3
		Board installed on board for thermostats with 0-10V analogue output for 2-pipe systems	Supplied separately		KBS.0

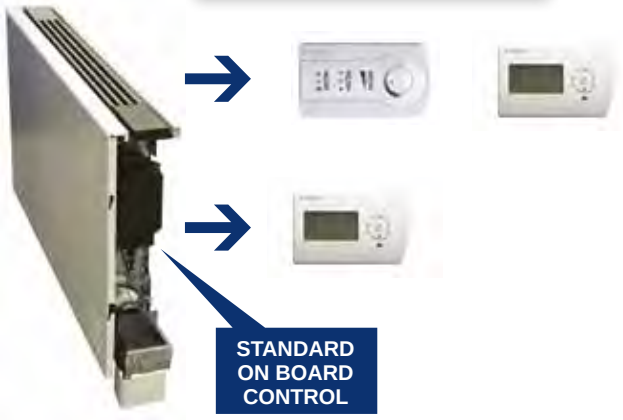

Regulation functions

Room temperature setting, fan speed (AUTO, NIGHT, MIN, MAX) and operating mode (OFF/Summer/Winter/Auto/Fan).

- Type of system: 2-pipe, 2-pipe with integrated radiant function with heating, 4-pipe
- Manual or automatic summer/winter switching

Comfort functions

- HOT START heating function with water temperature enable
- TOO COOL cooling function with water temperature enable
- Automatic speed adjustment with continuous modulation or 4-speed control
- Operating mode stored
- Automatic dimming
- Keyboard lock

Advanced functions

- Winter radiant function with fan off
- Digital input can be set as remote ON/OFF
- Digital outputs for hot and cold calls (potential-free contact)

Master/Slave Function

- Centralised management of multiple fan coils through a single master unit with SLIM -Touch KPSTB or KPSTW panel.

31 units in total
Maximum distance: 100m

Serial interface

- RS485 Modbus RTU serial interface, standard on KPSTB or KPSTW panel or as an accessory for KCS.M/B control; serial routing from the same control.
- RS485/BACnet gateway for communication from MODBUS RTU to BACNET IP; up to 64 fan coils with RS485 interface.
- RS485/FTT10-LonWorks gateway for communication from MODBUS RTU to LonWorks; up to 64 fan coils with RS485 interface.

Dimensions 110x78x17.5mm Wall mounting installation

Slim-Touch KPSTB or KPSTW

panel with room temperature probe and integrated RS485 interface.

LIT-Touch

New user experience

LIT Touch is the new Rhoss control platform for Yardy fan coils and Diva boxes, completely renewed and created with the aim of improving the user experience.

Touch interface

The true core of the platform is the new panel LIT-Touch panel for wall-mounted installation in view, with capacitive touch technology and LED display.
With a very intuitive interface it adapts to every furnishing requirement thanks to the two colour options: glossy black or pearl white.
The platform also includes the IR receiver with a room temperature probe for wall mounting and remote control, for ceiling or false ceiling units.

Master/slave function

15 units in total
Maximum distance: 100m

Intuitive control

The control allows the desired temperature in the room to be managed together with the fan speed, the wintersummer changeover or automatic season setting, and the display of the room temperature.
A number of integrated functions are required for room control - such as the master control of multiple slave units - digital inputs and outputs such as window contact, hot/cold call, alarm signal and optional serial interface.

LIT-Touch

Electronic controls for Yardy fan coils and Diva cassette fan coils

ADVANCED LIT-TOUCH CONTROLS

YARDY-I EV3 / YARDY EV3 with cabinet	YARDY-I EV3 / YARDY EV3 recessed	YARDY-ID2 / YARDY-DUCT2	YARDY-HP
INVERTER	INVERTER	INVERTER	

YARDY-IEV3 YARDY-EV3 YARDY-ID2
YARDY-Duct2 YARDY-HP

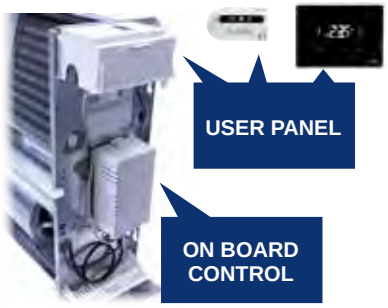

			USER PANEL	ON BOARD CONTROL	WALL MOUNTED PANEL	RECEIVER + REMOTE CONTROL	/
			TYPE	B	KPLTW o KPLTB	KTLT + KRLT[1]	/
							No user panel
			Master/Slave Function	MASTER	MASTER	MASTER	SLAVE
	ON BOARD CONTROL ADDITIONAL COMPONENTS	Supply		↓	↓	↓	↓
	Electronic control for: - 2 pipe - 2 pipe with electrical resistance - 4-pipe installations	Factory fitted		CF/B	CF/P + KPLTB / KPLTW	CF/P + KTLT + KRLT	CF/P
		Supplied separately		KCF/B	KCF/P + KPLTB / KPLTW	KCF/P + KTLT + KRLT	KCF/P
LIT-TOUCH CONTROL ADDITIONAL COMPONENTS	Air temperature probe installed on the unit[2]	Factory fitted		AS STANDARD	STA1 | STA3		
		Supplied separately		AS STANDARD	KSTA1 | KSTA3		
	Board with 2 settable digital outputs[3]	Factory fitted		DO2			
		Supplied separately		KDO2			
	RS485 Modbus RTU serial board	Factory fitted		SS			/ [4]
		Supplied separately		KIF485			/ [4]

Air temperature probe on the wall-mounted control panel, receiver or installed on the unit; water temperature probe always installed.

(1) Infrared receivers for remote control: KRLT for wall mounting installation; KRLTI for DIVA-type box installation with PLP ceiling panelling, KRLTM for installation on DIVA-type boxes with PLM ceiling panelling.

(2) (K)STA1 Air temperature probe installed on the unit as an alternative to the temperature probe on the KPLT panel or KRLT receiver, 0.6 m long; probe (K) STA3, 3 m long, is available for the YardyHP range for duct installation.

(3) 2 digital outputs: ON/OFF, Summer/Winter mode, which can also be configured as a unit alarm.

(4) For third-party BMS connection with KCF/P control, it is possible to use the RS485 serial board without a user panel.

Regulation functions

- Room temperature setting, fan speed (AUTO, MIN, MED, MAX) and (OFF/Summer/Winter/Auto/Fan) operating mode.
- Type of system: 2-pipe, 2-pipe with supplementary electrical resistance, 2-pipe with radiator or radiant panel in heating and 4-pipe.
- Manual or automatic or digital input summer/winter switching.

Comfort functions

- HOT START heating function with water temperature enable.
- TOO COOL cooling function with water temperature enable in 2-pipe systems.
- Automatic regulation of modulating speed for fan coils with EC motor and 3 speeds for fan coils with AC motor.
- Operating mode stored.
- Automatic dimming.
- Keyboard lock.

Advanced functions

- Set-point regulation or delta set-point limitation (+/-3°C modifiable), compared to a reference value.
- Limited operation for hotel rooms.
- Thermostat ventilation or continuous ventilation (can be enabled).
- Thermostat control of a radiator or radiant panel with winter operation for 2-pipe systems.
- Up to 3 digital inputs, which can be configured as remote ON/OFF, remote summer/winter, economy, window contact, general alarm (control input).
- Additional board with 2 digital outputs: ON/OFF, summer/winter mode (potential-free contacts also settable as a unit alarm).

Master/Slave Function

- Centralised management of multiple slave units via a single Master unit equipped with a control panel or receiver.
- --> In the case of master/slave management, it is possible to use an air temperature probe on the master unit or the temperature probe of every slave unit, if provided.

Dimensions 120x86x17mm
Wall mounting installation

Lit-Touch KPLTB or KPLTW Panel

with room temperature probe.

KRLT receiver

with room temperature probe.

Dimensions 95x58x30mm
Wall mounting installation

KTLT Remote control

Serial interface

- RS485 Modbus RTU serial interface and serial routing from every type of control.
- RS485/BACnet gateway for communication from MODBUS RTU to BACNET IP; up to 64 fan coils with RS485 interface.
- RS485/FTT10-LonWorks gateway for communication from MODBUS RTU to LonWorks; up to 64 fan coils with KRS485 interface.

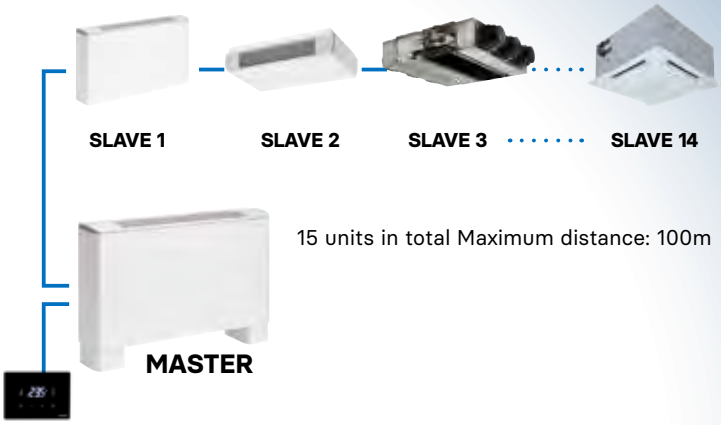

15 units in total Maximum distance: 100m

LIT-Touch

Electronic controls for Yardy fan coils and Diva cassette fan coils

LIT-TOUCH AND SWING ADVANCED CONTROLS

DIVA DIVA-I DIVA-XLI		USER PANEL	WALL MOUNTED PANEL	RECEIVER + REMOTE CONTROL	/
		TYPE	KPLTW or KPLTB	KTLT + KRLT(1)	/
					No user panel
		Master/ Slave Function	MASTER	MASTER	SLAVE
ON BOARD CONTROL ADDITIONAL COMPONENTS	Supply		↓	↓	↓
LIT-TOUCH CONTROL: Electronic control for: - 2 pipe - 2 pipe with electrical resistance - 4-pipe installations	Factory fitted		CF/P (1) + KPLTB / KPLTW	CF/P (1) + KTLT + KRLT (2)	CF/P (1)
	Supplied separately		KCF/P + KPLTB / KPLTW	KCF/P + KTLT + KRLT (2)	KCF/P
ADDITIONAL COMPONENTS: Board with 2 settable digital outputs(4)	Supplied separately		KDO2		
ADDITIONAL COMPONENTS: RS485 Modbus RTU serial board	Supplied separately		KIF485		/ (5)

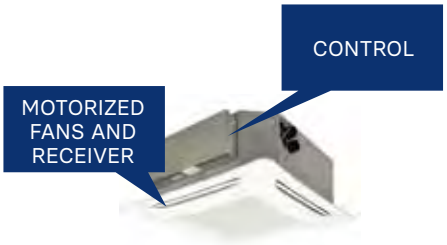

DIVA-XLI SWING		USER PANEL	WALL MOUNTED PANEL	RECEIVER + REMOTE CONTROL	/
		TYPE	KPS	KTS + KRS	/
					No user panel
		Master/Slave Function	MASTER	MASTER	SLAVE
ON BOARD CONTROL ADDITIONAL COMPONENTS	Supply		↓	↓	↓
SWING CONTROL: unit complete with motorised fins control, IR receiver and RS485-Modbus RTU serial board, for systems: - 2-pipe - 2-pipe with electrical resistance - 4-pipe	Factory fitted		CF/S+KPS	CF/S+KTS(+KRS)(3)	CF/S

Air temperature probe on the unit and on the wall-mounted control panel or on the KRLT and KRS receiver; water temperature probe always installed.

(1) Not available factory fitted for Diva-XLI RE for 2-pipe systems with electrical resistance.

(2) Infrared receivers for remote control: KRLT for wall mounting installation; KRLTI for fixing on PLP ceiling panelling only for Diva and Diva-I; KRLTM ceiling mounted only for Diva and Diva-with PLM ceiling panelling.

(3) Infrared receiver for standard remote control for DIVA-XLI SWING on PLP/S ceiling panelling, KRS receiver optional.

(4) 2 digital outputs: ON/OFF, Summer/Winter mode, which can also be configured as a unit alarm.

(5) For third-party BMS connection with (K)CF/P control, it is possible to use the RS485 serial board without a user panel.

Standard controls

Controls for fan coils

YARDY-I EV3 / YARDY EV3 with cabinet	YARDY-I EV3 / YARDY EV3 recessed	YARDY-ID2 / YARDY-DUCT2	YARDY-HP	DIVA-I / DIVA-XLI / DIVA
INVERTER	INVERTER	INVERTER		INVERTER

STANDARD CONTROLS

STANDARD FAN COIL (*)	INSTALLATION:	3-speed ON/OFF switch	0-10 Vdc Minimum fan analogue	Room thermostat	Thermostat output	Air sensor with remote control option	Summer/winter switch	3-way ON/OFF valve control	2-way ON/OFF valve control	Electric heater control	Ventilazione continua/ termostata	2-pipe systems	4-pipe systems	Weekly time bands	Control interface for 4 fan coil units	Serial interface
KC C	→ KC - ❖ C on board	◆														
KTA TATM	→ KTA - ❖ TATM on board	◆		◆	◆		◆									
KCV2	→ KCV2 Wall mounted	◆			◆		◆								◆	
KTCV2	→ KTCV2 wall mounted → KBTCV2 - ❖ TCV2 on board	◆		◆	◆ ACCESSORY	◆	◆	◆	◆	◆	◆	◆	◆		◆	
KTCVA	→ KTCVA wall mounted → KBTCVA - ❖ TCVA on board	◆		◆	◆	◆	◆ AUTOMATIC	◆			◆	◆			◆	
KTCVR	→ KTCVR wall mounted → KBTCVR - ❖ TCVR on board	AUTOMATIC SPEED /MINIMUM SPEED ◆		REGULATION ±5°C ◆	◆	◆	◆ AUTOMATIC	◆	◆ ONLY FOR 4-PI-PE-SYSTEMS	◆		◆	◆		◆	
STANDARD FAN COIL	→ KTVD semi-recessed in wall	MANUAL/AUTO-MATIC SPEED ◆		◆	TIMED ◆ (A)		AUTOMATIC ◆ (B)	◆	◆	◆	◆	◆	◆	◆	◆	
	→ KTVDM semi-recessed in wall	MANUAL/AUTO-MATIC SPEED ◆		◆	TIMED ◆ (A)		AUTOMATIC ◆ (B)	◆	◆	◆	◆	◆	◆	◆	◆	◆
INVERTER FAN COIL	→ KTVDI semi-recessed in wall	MANUAL/AUTO-MATIC SPEED ◆	◆	◆	TIMED ◆ (A)		AUTOMATIC ◆ (B)	◆	◆	◆	◆	◆	◆	◆		
	→ KTVDIM semi-recessed in wall	MANUAL/AUTO-MATIC SPEED ◆	◆	◆	TIMED ◆ (A)		AUTOMATIC ◆ (B)	◆	◆	◆	◆	◆	◆	◆		◆

(A) Fan or minimum thermostat with KSO probe (accessory) start delay.
(B) Manual summer/winter switch or by contact or automatic with KSO probe (accessory).
❖ Factory mounted → supplied loose

(*) The KADC analogue digital converter is available for use of standard KCV2, KTCV2, KTCVA, KTCVR controls on Inverter fan coils.

Terminal units and heat recovery units

Opposing flow heat recovery unit for primary air management with CO2 probe in open space offices

Terminal units

Heat recovery units

Terminal units

Terminal unit 218
UTNA Platinum

Heat recovery units

Heat recovery unit 220
UTNR-A Platinum

Heat recovery unit 224
UTNR-HE Platinum

Heat recovery unit 226
UTNR-HP

Electa-REK 228
UTR 20-30 - UTRR 15/45

Heat recovery unit 230
VMC-E

Full Controls

Controls for terminal units 232
Full Controls

UTNA Platinum

Terminal unit

Cooling capacity:
6,4÷70 kW

Heating capacity:
4,9÷78 kW

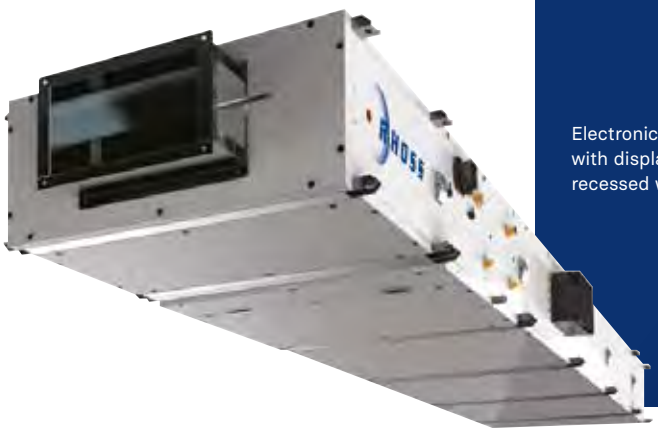

Electronic control panel with display, for semi-recessed wall installation

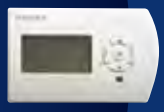

Modular ductable air handling terminal units.

KEY FEATURES

- **Brushless EC fan IE5 efficiency**
- **Horizontal or vertical installation**
- **ISO Coarse Filter 55% (G4) Airsuite Biocide**
- **ePM1 filter 50% (F7)**

CONSTRUCTION FEATURES

- Terminal air handling unit: with modular units for horizontal or vertical installation (013-050) with ducting.
- Structure with double wall sandwich type freestanding panelling, 30mm-thick with closed cell expanded polyurethane insulation with high soundproofing and thermal insulation capacity.
- Routine machine maintenance from the bottom (for the horizontal version with installation in false ceiling or hanging from ceiling) or frontally (for the vertical version) with removable panels.
- Coil module BA (horizontal) / coil module BAV (vertical up to size 050) including: standard ISO Coarse Filter 55% (G4), All filters are supplied complete with differential pressure switch to signal filter clogging condition in compliance with European regulation no. 1253/2014.
  Finned coil heat exchanger, with copper pipes and 2 rows of aluminium fins for heating or reheating only and 4-6 rows for cooling and/or heating with right or left connections to be selected with order. Condensate drain pan in aluminium both for horizontal BA4R and BA6R versions and vertical BAV4R and BAV6R versions.
- SV fan module complete with EC Brushless plenum centrifugal fan with single intake directly coupled to electric motor efficiency class IE5. Static and dynamic balancing of the entire assembly, built in accordance with DIN ISO standard 1940. G6.3 balancing grade. Standard control of the rotation speed via special 0-10V analogue input. Electrical connection panel fitted as standard complete with disconnect switch, protection fuses and connecting terminal block.

FACTORY FITTED ACCESSORIES

- AIRSUITE G4- Iso Coarse Filter 55% (ISO 16890) G4 (EN 779) Airsuite with biocide capacity
- F7 - Fine dust filter Iso ePM1 50% (ISO 16890) F7 (EN 779)
- SG - Optional polypropylene drop separator at low load losses.
- TAG - Optional antifreeze thermostat.

Accessory modules
- PMA - Intake/outlet plenum with pre-cut side outlets.
- SIL - Plenum with absorbent cartridge silencer to be placed on delivery or intake.
- MUV-PRV - Plenum with steam humidifier and external electric generator.
- BE - Additional electrical coil for connection to channel.

SEPARATELY SUPPLIED ACCESSORIES

- KSG - Polypropylene drop separator at low load losses (only for BA).
- KTAG - Antifreeze thermostat (only for BA).
- KSER - Kit in combination with PMA consisting of: damper with aluminium blades and frame, fitted with seal gasket, certified class 2 according to En 1751 for fresh air (max 30%) or recirculated air and a fastening panel to PMA module. The damper is sized for treating up to 100% of the UTNA air flow rate and may be positioned at the front, top or bottom of the PMA.
- KMS - Manual control for KSER damper.
- KB2R - Separately supplied additional reheat coil.

CONTROLS

- KPTZ - Potentiometer for wall mounting installation, for manual fan speed control.
- KTVDIM - Electronic control panel with display, for semi-recessed wall installation, including ON/OFF button, MODE, 3 Speeds+AUTO, SETPOINT change; auxiliary contacts to control ON/OFF valve in 2-pipe and 4-pipe systems; summer/winter switching; manual/automatic/from contact; continuous/ thermostat ventilation; configurable digital inputs (SCR, ECO, SIC, ALARM), weekly time bands control, complete with RS485 resident serial interface (Modbus RTU protocol).
- KRCA1 - Electronic control panel with display, for semi-recessed wall installation, including ON/OFF button, MODE, 2 Speeds, SETPOINT change; summer/ winter switching with button or remote digital input; continuous ventilation, weekly time bands control room probe; 3 analogue outputs to control modulating fan, 1 or 2 modulating valves in 2-pipe or 4-pipe systems, modulating damper; 1 auxiliary contact to control on/off electrical resistance (1 stage) in 2-pipe systems + electrical resistance; 2 configurable digital inputs and 2 configurable analogue inputs. Compete with RS485 resident serial interface (Modbus RTU protocol).
- KPAU - Humidistat panel for PRV steam producer control.
- FULL CONTROL- for a description of these controls, please refer to the relevant page

Features

INVERTER DUCTED INDOOR

	UTNAP MODEL			13	25	35	50	70	90	120
❷	Coil thermal power Only hot	BA 2R/BAV 2R	kW	4,9	8,4	11,7	16,8	25,1	32,8	39,1
❶	Cooling capacity (total heat)	BA/BAV 4R	kW	6,4	11,1	14,6	21,3	31,9	45,2	53,6
❶	Cooling capacity (sensitive heat)	BA/BAV 4R	kW	5	8,9	12	17,2	25,9	34,6	42,4
❷	Heating capacity	BA/BAV 4R	kW	7,6	13,6	18,4	26,5	39,7	52,3	64,4
❶	Cooling capacity (total heat)	BA/BAV 6R	kW	8,1	14,9	20,2	27,5	41,2	56,8	68,9
❶	Cooling capacity (sensitive heat)	BA/BAV 6R	kW	5,9	11	15,1	21	31,5	41,4	51,6
❷	Heating capacity	BA/BAV 6R	kW	9,1	16,6	22,8	32,2	48,3	62,1	78,2
❸	Electrical resistance power	BE	kW	3	6	9	13	17	24	24
	Electrical supply	BE	V-ph-Hz	230-1-50	400-3-50	400-3-50	400-3-50	400-3-50	400-3-50	400-3-50
	Adjustment type	BE		1 step	1 step	1 step	2 step	2 step	2 step	2 step
	Erp classification	SV		UVU	UVU	UVU	UVU	UVU	UVU	UVU
	Fans	SV	n°	1	2	2	2	2	2	2
	Adjustment type	SV				EC brushless/ 0-10V				
❹	Air flow rate	NOM	m³/h	1300	2500	3500	5000	7500	9000	12000
		MIN	m³/h	800	1100	1500	2100	3100	5000	5000
		MAX	m³/h	2100	3700	4800	6700	10500	14400	15500
❹	Useful static head.	NOM	Pa	300	300	300	300	300	300	300
	Electrical supply	SV	V-ph-Hz	230-1-50	230-1-50	230-1-50	230-1-50	400-3-50	400-3-50	400-3-50
❺	Irradiated sound power	SV	dB(A)	53	57	61	60	63	62	65
❺	Intake sound power		dB(A)	61	65	68	67	70	70	73
❺	Delivery sound power	SV	dB(A)	71	74	78	78	81	80	83
❹	SFP Int (Erp 2018<230)	SV	W/m³/s	80	121	137	128	143	101	146
	Filter class EN779			G4/F7	G4/F7	G4/F7	G4/F7	G4/F7	G4/F7	G4/F7
	PRV Maximum steam production	PRV	Kg/h	3	5	5	8	10	15	18
	Electrical supply	PRV	V-ph-Hz	230-1-50	230-1-50	230-1-50	400-3-50	400-3-50	400-3-50	400-3-50
	DIMENSIONS AND WEIGHTS			**13**	**25**	**35**	**50**	**70**	**90**	**120**
	L - Width		mm	945	1245	1545	1645	1645	2045	2045
	H - Height		mm	387	387	387	504	687	837	837
	SV - Depth		mm	750	750	750	750	750	750	750
	BA - Depth		mm	750	750	750	750	750	750	750
	PMA - Depth		mm	480	480	480	596	780	931	931
	BE - Depth		mm	270	270	270	270	270	270	270
	MUV - Depth		mm	750	750	750	750	750	750	750
	SIL - Depth		mm	750	750	750	750	750	750	750
	BAV - Height		mm	812	812	862	962	-	-	-
	SV Weight		kg	53	60	67	88	94	132	142
❻	BA Empty weight		kg	67	90	105	112	136	191	191
❻	BAV Empty weight		kg	62	78	95	121	-	-	-
	PMA Weight		kg	22	27	32	40	51	70	70
	BE Weight		kg	18,5	23	27,5	32	34	62,5	62,5
	MUV Weight		kg	28	34	40	44	47	58	58
	SIL Weight		kg	34	44	51	58	70	91	91

Data at the following conditions:

❶ Air T in 26°C D.B.; 18.6°C W.B. (50% R.H.); water T in 7°C with Δt 5°C; nominal air flow rate.

❷ Air T in 20°C D.B.; 13.7°C W.B. (50% R.H.); water T in 40°C with Δt 5°C; nominal air flow rate.

❸ Air T in 20°C D.B.; 13.7°C W.B. (50% R.H.); nominal air flow rate.

❹ Air T in 20°C D.B.; 13.7°C W.B. (50% R.H.); nominal air flow rate; 4-row coil BA/BAV 4R; clean type F7 filter.

❺ Of SV only with work point at nominal air flow rate; and total head calculated in configuration: 4-row coil BA/BAV 4R; clean type F7 filter; available static 300 Pa. In accordance with EN ISO 11546-2.

❻ Weight considered for a BA structure+filter+BA6R coil+BA2R coil+SG droplet separator+TAG antifreeze thermostat configuration. For other configuration weights, please refer to Rhoss 2up to Date" selection software

UTNR-A Platinum

Heat recovery unit

Air flow rate: 400÷4.700 m³/h

PCUS Panel

Fresh air terminal units with counterflow opposing flow static heat recovery.

KEY FEATURES

- **Horizontal or Vertical Version**
- **Very high efficiency heat recovery Eurovent Certificate**
- **Multi-speed or Brushless EC fans**
- **F7 and M5 high efficiency filters**
- **Double sandwich wall with high insulation capacity**

CONSTRUCTION FEATURES

- Recovery unit: very high yield static type with aluminium plates with back-current flows with close step. Extraction of side exchange pack from top or bottom depending on models and versions
- Fans: Outdoor air intake and forward blade dual intake centrifugal exhaust type with a directly coupled electric motor; optionally, EC Brushless technology high efficiency electric motors. The fan unit is installed on anti-vibration mountings to prevent vibrations being transmitted to the structure.
- Structure: frame made with extruded aluminium profile with preloaded nylon joints. Sandwich buffer panels, 23 mm thick, made with galvanised sheet steel on the inside and pre-painted on the outside with thermal and acoustic insulation made of injected polyurethane, with a density of 45 kg/m3.
- Filtering section: filtration sections made of compact cell filters with low pressure drop polypropylene media, removable from the side, with ISO 16890 ePM1 55% efficiency class (F7 EN 779) in fresh flow and ISO 16890 ePM10 55% (M5 EN 779) in exhaust flow.
- Factory-installed dirty filter differential pressure switches
- Condensate drain pan made of galvanised sheet steel with condensate drain connection from the bottom.
- Integrated free cooling or thawing by-pass system. Thanks to the presence of a motorised damper next to the heat recovery, a bypass system can be created to manage freecooling or thawing depending on thermo-hygrometric needs or conventions

VERSIONS

- UTNR-A/O PLATINUM - Recovery unit with opposing flow heat exchanger, horizontal installation and with standard multi-speed fans
- UTNRE-A/O PLATINUM - Recovery unit with opposing flow heat exchanger, horizontal installation and with Brushless EC fans that reduce power consumption for ventilation at equal performance.
- UTNR-A/V PLATINUM - Recovery unit with opposing flow heat exchanger, installed vertically and with standard multi-speed fans
- UTNRE-A/V PLATINUM - Recovery unit with opposing flow heat exchanger, installed vertically and with Brushless EC fans that reduce power consumption for ventilation at equal performance.

AVAILABLE ORIENTATION

- 01 - Right-hand connections
- 02 - Left-hand connections

The selected orientation must be specified to process the job order.

INSTALLATION

- EXT- Outdoor installation including rain cover, 80 mm-high base and an outdoor electrical box (the kit does not include the roof for any additional accessory modules)

Features

FACTORY FITTED ACCESSORIES

- BER - PRE-POST - Pre-heating electrical resistance (no frost function) installed inside, complete with filament-type safety thermostats and control relays to contain pressure drops.
- BA - Internal hot water reheating coil.
- BAATG - Antifreeze thermostat installed downstream of the water reheating coil.
- ERF7-F7 efficiency return filter

SEPARATELY SUPPLIED ACCESSORIES

- KSBFR - Section containing hot/cold water coil to reheat or recool, placed outside the machine in front of the intake vent. Includes stainless steel condensate drain pan with drain connection from the bottom.
- KSBFR + ATG - Hot/cold water coil section with mounted antifreeze thermostat.
- KSRE - Regulation damper set up for servo-control, consisting of a galvanised sheet steel frame with adjustable fins.
- KSSC - Duct silencer with rectangular baffles in mineral wool covered with a protective film of glass fibre and micro-stretched sheet metal.
- KRMS - Sections with three dampers for air mixing and recirculation (only for horizontal installation).
- KSPC - 4 circular connections

CONTROLS

- KCV2 - Speed selector for wall mounting installation, to select from 3 speeds: Off/heating/cooling switch; 3-speed switch; 230V power supply.
- PCUS – composed from the control unit on board of the unit + WALL LCD display , suitable for controlling units with 3-speed fans or EC Brushless Functionality: control of the winter/summer ambient temperature, management of: water battery and antifreeze thermostat (ON/OFF or modulating valve control), electrical resistance of preheating and/or post-heating, air dampers, freecooling of heat recovery, air filter pressure switches, CO2 or Humidity sensor for automatic modulation of EC fans, integrated clock for time slot program.
- PCUSM- same functionality as PCUS card with Modbus RTU connection port
- FULL CONTROL- for a description of these controls, please refer to the relevant page

Mod. 40-500 HORIZONTAL ORIENTATION TYPE 01	Mod. 40-500 HORIZONTAL ORIENTATION TYPE 02
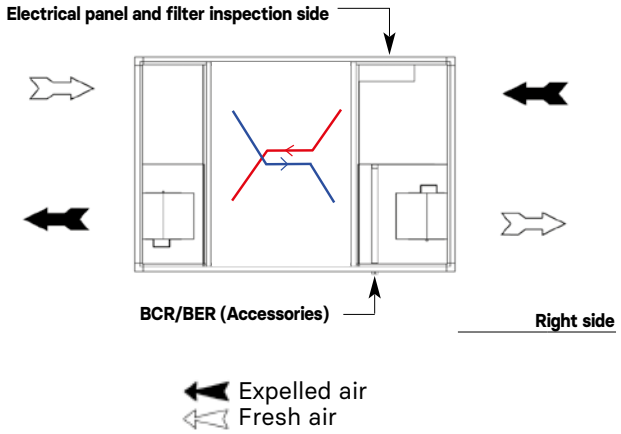	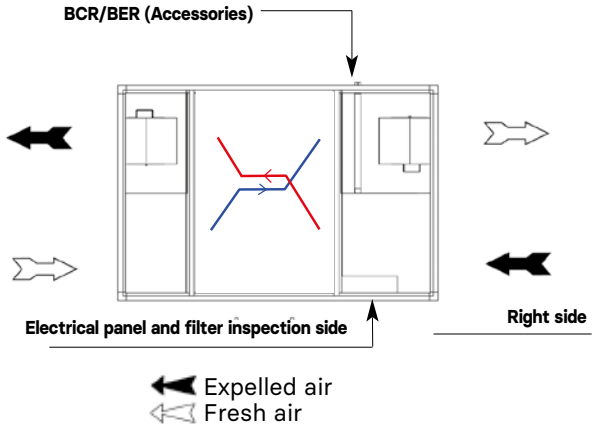
The illustrated guidelines concerning the machine seen from above	

Mod. 40-500 VERTICAL ORIENTATION TYPE 01	Mod. 40-500 VERTICAL ORIENTATION TYPE 02
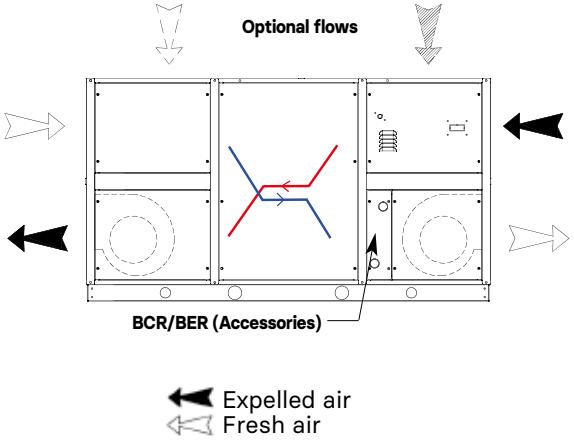	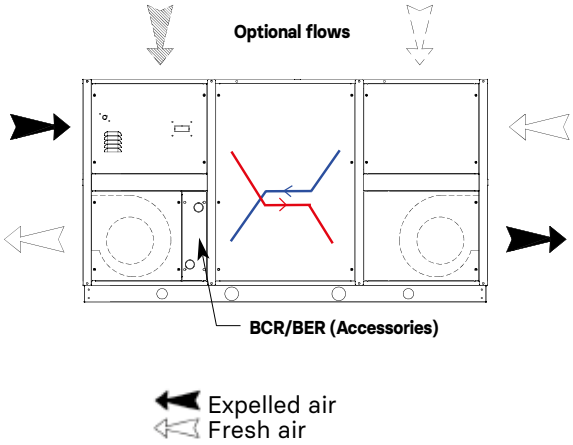
The illustrated guidelines concerning the machine from inspection side	

	UTNR-A PLATINUM MODEL		40	75	100	150	200	320	400	500
	Outdoor air filters		F7	F7	F7	F7	F7	F7	F7	F7
	Return air filters		M5	M5	M5	M5	M5	M5	M5	M5
	TECHNICAL SPECIFICATIONS									
	Nominal air flow rate	m³/h	400	750	1000	1500	2050	3200	3800	4700
	STANDARD FANS									
	Motor type		AC	AC	AC	AC	AC	AC	n.d.	n.d.
❶	Nominal available static pressure	Pa	160	120	180	160	120	180	n.d.	n.d.
❶	Max. available static pressure	Pa	160	120	180	160	120	180	n.d.	n.d.
❷	Specific fan power (SFP)	W/(m³/s)	740	934	1105	1102	1078	1054	n.d.	n.d.
❸	Sound power level	dB(A)	58	61	61	64	64	68	n.d.	n.d.
	Speed No./Adjustment Type		3	3	3	3	3	3	n.d.	n.d.
	Electrical supply	V-ph-Hz	230-1-50	230-1-50	230-1-50/60	230-1-50/60	230-1-50/60	230-1-50/60	n.d.	n.d.
	BRUSHLESS EC FANS									
	Motor type		EC	EC	EC	EC	EC	EC	EC	EC
❶	Nominal available static pressure	Pa	160	120	180	160	120	180	200	200
❶	Max. available static pressure	Pa	340	210	520	500	540	375	330	200
❷	Specific fan power (SFP)	W/(m³/s)	705	742	1059	1048	898	1040	949	935
❸	Sound power level	dB(A)	57	60	59	61	59	64	66	68
	Speed No./Adjustment Type		0-10 V	0-10 V	0-10 V	0-10 V	0-10 V	0-10 V	0-10 V	0-10 V
	Electrical supply	V-ph-Hz	230-1-50	230-1-50	230-1-50/60	230-1-50/60	230-1-50/60	230-1-50/60	230-1-50/60	230-1-50/60
	COUNTERFLOW HEAT RECOVERY									
❹	Winter Efficiency	%	83,6	82,9	81,6	83,3	83,7	86,8	84,1	84,2
❺	Summer Efficiency	%	75,5	75,9	74,5	75,1	75,6	78	75	75,1
❻	Efficiency Regulation EC 1253/2014	%	75,9	76,4	75	75,6	76	76,3	75,5	75,6
	OPERATING LIMITS									
	Outdoor air humidity/temperature limit	°C/%	-5<T<45 / 5<UR<95							
	Outdoor air humidity/temperature limit with KRMS accessory	°C/%	-15<T<45 / 5<UR<95							
	Indoor air humidity/temperature limit	°C/%	+10<T<35 / 10<UR<90							
	DIMENSIONS AND WEIGHTS		40	75	100	150	200	320	400	500
	HORIZONTAL vers. length	mm	1480	1940	1940	2200	2200	2500	2500	2500
	HORIZONTAL vers. height	mm	380	480	480	550	550	680	680	680
	HORIZONTAL vers. depth	mm	800	990	990	1000	1400	1400	1400	1700
	HORIZONTAL vers. weight	kg	90	140	150	170	200	230	260	300
	VERTICAL vers. length	mm	1480	1940	1940	2200	2200	2500	2500	2500
	VERTICAL vers. depth	mm	420	520	520	520	720	720	720	720
	VERTICAL vers. height	mm	830	1070	1070	1080	1480	1480	1480	1780
	VERTICAL vers. weight	kg	90	150	160	180	220	250	280	330
	Condensate drain	inch	1/2"	1/2"	1/2"	1/2"	1/2"	1/2"	1/2"	1/2"

Data at the following conditions:

❶ Values referring to the nominal air flow rate considering the pressure drops of the heat recovery and the F7 filter.
❷ Values referring to the nominal air flow rate and Nominal available static pressure.
❸ Radiated sound power level from casing.
❹ Outdoor air T: -5°C, 80% UR; Ambient air T: 20°C, 50% UR.
❺ Outdoor air T: 32°C, 50% UR; Amb. air T: 26°C, 50% UR.
❻ Dry nominal conditions, measured according to En 308 in balanced flows. Outdoor air 5°C D.B.; Ambient air 25°C D.B.

UTNR-HE Platinum

Heat recovery unit

Air flow rate: 310÷4.250 m³/h

PCUS Panel

Fresh air terminal units with enthalpy rotary heat recovery.

KEY FEATURES

- **Very high efficiency hygroscopic heat recovery Eurovent Certificate**
- **Multi-speed or Brushless EC fans**
- **F7 and M5 high efficiency filters**
- **Double sandwich wall with high insulation capacity**
- **Full control kit**

CONSTRUCTION FEATURES

- Recovery unit: high yield rotary type made of aluminium with hygroscopic surface. Electric induction motor with belt and pulley transmission. Recovery unit-motor assembly easily removed from the side for periodic maintenance.
- Fans: outdoor air intake and forward blade dual intake centrifugal exhaust type with a directly coupled electric motor; optionally, EC Brushless technology high efficiency electric motors. The fan unit is installed on anti-vibration mountings to prevent vibrations being transmitted to the structure.
- Structure: frame made with extruded aluminium profile with preloaded nylon joints. Sandwich buffer panels, 23 mm thick, with galvanised sheet steel on the inside and pre-painted on the outside with thermal and acoustic insulation made of injected polyurethane, with a density of 45 kg/m3.
- Integrated free cooling or thawing by-pass system. A by-pass system can be provided to manage freecooling or thawing based on requirements or thermo-hygrometric needs.
- Filtering section: filtration sections made of compact cell filters with low pressure drop polypropylene media, removable from the side, with efficiency class F7 in fresh flow and M5 in exhaust flow.
- Factory-installed dirty filter differential pressure switches
- Terminal block: already part of the machine to facilitate the electrical connections, fan controls and rotary recovery.

FACTORY FITTED ACCESSORIES

- ERF7-F7 efficiency return filter
- BP-Bypass control for free-cooling including: NC relay on board the panel (suitable for PCU and KPCUE) and 2 NTC probes on board the machine

SEPARATELY SUPPLIED ACCESSORIES

- KBER - Reheating electrical resistance installed outside in a duct dedicated module, complete with filament-type safety thermostats and control relays to contain pressure drops.
  230/1/50 single-phase electrical supply for model 040 and 075. 400/3/50 three-phase for 100-400 models.
- KSBFR - Section containing hot/cold water coil to reheat or recool, placed outside the machine in front of the intake vent. Includes stainless steel condensate drain pan with drain connection from the bottom.
- KSBFR + ATG - Hot/cold water coil section with mounted antifreeze thermostat
- KSRE - Regulation damper preset for servo-control, consisting of a galvanised sheet steel frame with adjustable fins.
- KSSC - Duct silencer with rectangular baffles in mineral wool covered with a protective film of glass fibre and micro-stretched sheet metal.
- KRMS - Sections with three dampers for air mixing and recirculation (only for horizontal installation).
- KSPC - 4 circular connections.

CONTROLS

- KCV2 - Speed selector for wall mounting installation, to select from 3 speeds: Off/heating/cooling switch; 3-speed switch; 230V power supply.
- PCUS – composed from the control unit on board of the unit + WALL LCD display , suitable for controlling units with 3-speed fans or EC Brushless
  Functionality: control of the winter/summer ambient temperature, management of: water battery and antifreeze thermostat (ON/OFF or modulating valve control), electrical resistance of preheating and/or post-heating, air dampers, freecooling of heat recovery, air filter pressure switches, CO2 or Humidity sensor for automatic modulation of EC fans, integrated clock for time slot program.
- PCUSM- same functionality as PCUS card with Modbus RTU connection port
- FULL CONTROL- for a description of these controls, please refer to the relevant page

VERSIONS

- UTNR-HE/O PLATINUM - Recovery unit with rotary heat exchanger, installed horizontally and with standard multi-speed fans
- UTNRE-A/O PLATINUM - Recovery unit with rotary heat exchanger, installed horizontally and with Brushless EC fans that reduce the power consumption for ventilation at equal performance.

AVAILABLE ORIENTATION

- 01 - Right-hand connections
- 02 - Left-hand connections
  The selected orientation must be specified to process the job order

INSTALLATION

- EXT- Outdoor installation

Features

	UTNR-HE PLATINUM MODEL		40	75	100	150	200	320	400
	Outdoor air filters		F7						
	Return air filters		M5						
	TECHNICAL SPECIFICATIONS								
	Nominal air flow rate	m³/h	310	640	1000	1650	2400	3200	3800
	STANDARD FANS								
	Motor type		AC	AC	AC	AC	AC	AC	n.d.
❶	Nominal available static pressure	Pa	230	130	190	160	300	180	n.d.
❶	Maximum available static pressure	Pa	230	130	190	160	300	180	n.d.
❷	Specific fan power (SFP)	W/(m³/s)	1409	1443	1580	1036	806	1226	n.d.
❸	Sound pressure level	dB(A)	56	58	62	64	68	67	n.d.
	Speed No./Adjustment Type		3	3	3	3	3	3	n.d.
	Electrical supply	V-ph-Hz	230-1-50	230-1-50	230-1-50/60	230-1-50/60	230-1-50/60	230-1-50/60	n.d.
	BRUSHLESS EC FANS								
	Motor type		EC	EC	EC	EC	EC	EC	EC
❶	Nominal available static pressure	Pa	230	130	190	160	300	180	100
❶	Max. available static pressure	Pa	430	280	560	600	480	460	240
❷	Specific fan power (SFP)	W/(m³/s)	1045	1263	1102	842	617	869	1029
❸	Sound pressure level	dB(A)	55	57	61	60	66	64	64
	Speed No./Adjustment Type		0-10 V						
	Electrical supply	V-ph-Hz	230-1-50	230-1-50	230-1-50/60	230-1-50/60	230-1-50/60	230-1-50/60	230-1-50/60
	COUNTERFLOW HEAT RECOVERY								
❹	Winter efficiency temp/enthalpy	%	79/74	74/69	73/58	74/60	75/62	74/60	73,5/59
❺	Summer efficiency temp/enthalpy	%	79/69	74/65	73/59	75/60	81/65	75/59,5	73/59
❻	Efficiency Regulation EC 1253/2014	%	74,2	74	73	73	73,7	74,3	73
	OPERATING LIMITS								
	Outdoor air humidity/temperature limit	°C/%	-5<T<45 / 5<UR<95						
	Outdoor air humidity/temperature limit with KRMS accessory	°C/%	-15<T<45 / 5<UR<95						
	Indoor air humidity/temperature limit	°C/%	+10<T<35 / 10<UR<90						
	DIMENSIONS AND WEIGHTS		**40**	**75**	**100**	**150**	**200**	**320**	**400**
	Length	mm	1075	1075	1205	1400	1720	1940	1940
	Height	mm	480	480	550	550	680	680	680
	Depth	mm	800	800	1000	1000	1290	1500	1500
	Weight	kg	70	75	105	140	180	230	250

Data at the following conditions:

❶ Values referred to the nominal air flow rate considering the pressure drops of the heat recovery and the F7 filter

❷ Values referred to the nominal air flow rate and Nominal available static pressure

❸ Sound pressure level referring to 1 m from the machine inlet in free field

❹ Outdoor air T: -5°C, 80% UR; Ambient air T: 20°C, 50% UR .

❺ Outdoor air T: 32°C, 50% UR; Amb. air T: 26°C, 50% UR .

❻ Dry nominal conditions, measured according to En 308 in balanced flows. Outdoor air 5°C D.B.; Ambient air 25°C D.B.

ORIENTATION TYPE 01

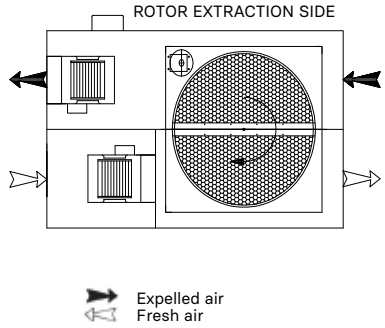

ORIENTATION TYPE 02

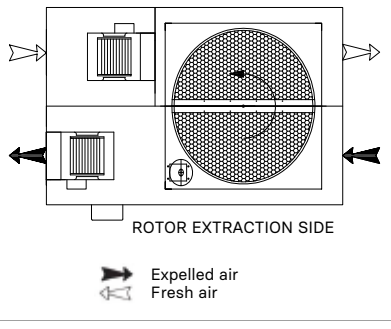

UTNR-HP

Heat recovery unit

Air flow rate: 350÷4.500 m³/h

KTUP User terminal for wall mounting

Fresh air terminal units with two-stage heat recovery unit.

KEY FEATURES

- **Combined crossed flow and active thermodynamic heat recovery**
- **Standard air filter with G4 efficiency**
- **Integrated electronics**

CONSTRUCTION FEATURES

- Recovery unit:
  - First stage of the crossed flow air-air static heat recovery with aluminium heat exchanger plates; lower condensate drain pan along the entire heat treatment zone.
  - Second stage of the active thermodynamic heat recovery unit with heat pump cooling circuit (with R410A gas) consisting of hermetic compressor (rotary or scroll type depending on the size of the machine), evaporating and condensing coils with copper pipes and continuous aluminium fins, electronic expansion valve, liquid separator and receiver, 4-way valve for cycle inversion, high and low pressure switches, Freon filter and liquid indicator.
- Fans: fresh air inlet and dual intake centrifugal exhaust type with a directly coupled electric motor. Fan unit installed on anti-vibration mountings to prevent the transmission of vibration.
- Structure and panels: frame made with extruded aluminium profile, Anticorodal 63 alloy, with preloaded nylon angular joints. Sandwich buffer panels, 23 mm thick, made internally with galvanised sheet steel and externally with galvanised pre-painted sheet steel (RAL 9002), with thermal and acoustic insulation made of injected polyurethane, with a density of 45 kg/m3.
- Filtering section: consisting of two class G4 filters (one on the fresh air intake and one on the ambient inlet), both can be removed from the bottom and side.
- Electrical panel: with integrated adjustment and power; NTC temperature probes on both the delivery and return air circuits; micro-processor electronic control for automatic room temperature management, winter/summer switch and thawing cycles; remote control of panel up to 20 m from the unit,

VERSIONS

AVAILABLE ORIENTATION:

- UTNR-HP 01, 02 – Heat recovery unit with cross-flow and active thermodynamic double heat exchanger with 01 or 02 orientation (right connection side) or 01s or 02s (left connection side).
  The selected orientation must be specified to process the job order.

INSTALLATION

- EXT - Protective roof for outdoor installation.

FACTORY FITTED ACCESSORIES

- BER - Internally installed filament type reheating electrical resistance, complete with safety thermostats and control relays. 230/1/50 single-phase for models 035-150. 400/3/50 three-phase for models 230-450.
- BEP - Internally installed filament type reheating electrical coil, complete with safety thermostats and control relays. 230/1/50 single-phase for models 035-150. 400/3/50 three-phase for models 230-450.
- PF - Differential pressure switch alerting to dirty filter, installed on intake filter.
- ATG - Antifreeze thermostat installed downstream of the water coil.
- EG4PF - G4 outdoor air filter with differential pressure switch.
- ERG4PF - G4 outdoor air filter and G4 return air with differential pressure switch.
- EF7 - F7 ePM1 70% outdoor air filter
- ERF7 - F7 ePM1 70% outdoor and return air filter.
- EG7PF - F7 ePM1 70% outdoor air filter with differential pressure switch.
- ERF7PF - F7 ePM1 70% outdoor and return air filter with differential pressure switch.

SEPARATELY SUPPLIED ACCESSORIES

- KSBFR - Section containing hot/cold water coil for reheat or recool, placed outside the machine in front of the intake vent. Includes a stainless steel condensate drain pan with drain connection from the bottom.
- KSBFR + ATG - Hot/cold water coil section with mounted antifreeze thermostat.
- KV2V ON/OFF - 2 way valve kit with On/Off servo-control.
- KV3V ON/OFF - 3 way valve kit with On/Off servo-control.
- KSRE230 - Regulation damper consisting of a galvanised sheet steel frame with adjustable fins, equipped with 230V ON/OFF servo-control.
- KSME230R - Regulation damper consisting of a galvanised sheet steel frame with adjustable fins, equipped with 230V ON/OFF servo-control with spring return.
- KSSC - Duct silencer with wool baffles covered with glass fibre and micro-stretched sheet steel.
- KRMS - 3-damper section for operation with outdoor air at low temperature up to -20°C, with modulating servo-controls.

CONTROLS SUPPLIED SEPARATELY

- KTUP - Additional user terminal, with remote control up to 50 m, for wall mounting.
- KSCMB - Modbus serial sheet.

Features

	UTNR-HP MODEL		35	60	100	150	230	320	450
	Nominal air flow rate	m³/h	350	600	1000	1500	2300	3200	4500
	Available delivery static pressure	Pa	165	170	195	155	155	185	175
	Available return static pressure	Pa	140	100	140	95	95	115	110
❶	Sound pressure level	db (A)	59/47/52	64/50/55	62/49/54	67/54/57	65/51/59	68/54/59	70/56/59
	Max available delivery static pressure - E Brushless Version	Pa	270	285	295	290	365	265	270
	Max available return static pressure - E Brushless Version	Pa	245	215	240	230	305	195	205
	FUNCTIONAL LIMITS								
❷	Standard configuration winter limit operating conditions	°C / %	MIN -10°C OUT & MIN 19°C 50% IN						
❷	Winter limit operating conditions with KRMS accessory	°C / %	MIN -20°C OUT & MIN 19°C 50% IN						
	Summer limit operating conditions	°C / %	MAX 38°C 50% OUT & MAX 27°C IN						
	Flow rate variation field	%	-10/10						
	ELECTRICAL SPECIFICATIONS								
	Electrical supply	V/ph/Hz	230/1/50	230/1/50	230/1/50	230/1/50	400/3/50	400/3/50	400/3/50
	Max. absorption	A	5,3	9	13,2	20,2	10	15,4	16,4
❸	**PERFORMANCE IN HEATING MODE**		**35**	**60**	**100**	**150**	**230**	**320**	**450**
	Static recovery efficiency	%	62	51	50	50	50	50	50
	Active recovery	W	1740	2960	5010	7690	11090	16300	17300
	Total power	W	3580	5790	9410	14390	21190	30260	36010
	Treated air temperature	°C	24	23	22	22	22	22	18
❹	Overall COP	W/W	10,9	9,6	9,22	8,64	8,9	9,9	12,6
❺	**PERFORMANCE IN COOLING MODE**								
	Static recovery efficiency	%	56	50	50	50	50	50	49
	Active recovery	W	1810	2860	4890	7270	10580	15310	16990
	Total power	W	2210	3450	5840	8720	12830	18390	21440
	Treated air temperature	°C	19	20	20	20	20	20	21
❹	Overall EER	W/W	4,2	3,9	4,2	3,9	3,9	4,1	5,01
	ACCESSORIES								
	BEP-BER Rated power	W	1500	1500	3000	3000	6000	9000	12000
	BEP-BER no. of stages	n°	1	1	1	1	3	3	3
❻	KSBFR-Thermal yield	W	2000	3100	4800	7800	11800	15300	21000
❼	THAIY-Cooling capacity	W	1200	1400	2900	4400	7900	9100	13100
	DIMENSIONS AND WEIGHTS								
	Length	mm	1540	1540	1840	1840	2040	2040	2240
	Height	mm	370	370	410	500	550	650	710
	Depth	mm	1240	1240	1440	1440	1690	1690	1890
	Weight	Kg	122	125	185	228	267	281	329

Data at the following conditions:

❶ Sound pressure level assessed at 1 m from: permanent ducted socket/intake socket/compressor compartment. Generally, the operating noise level differs from the indicated values depending on the operating conditions, reflected noise and peripheral noise.

❷ Referred to the nominal flow rate.

❸ Outdoor air -5°C UR 80%; ambient air 20°C UR 50%.

❹ Excluding adsorbed power for ventilation.

❺ Outdoor air 32°C RH 50%; ambient air 26°C UR 50%.

❻ Incoming air 20°C; water in/out 45/40°C

❼ Incoming air 21°C-75% UR; water in/out 7/12°C

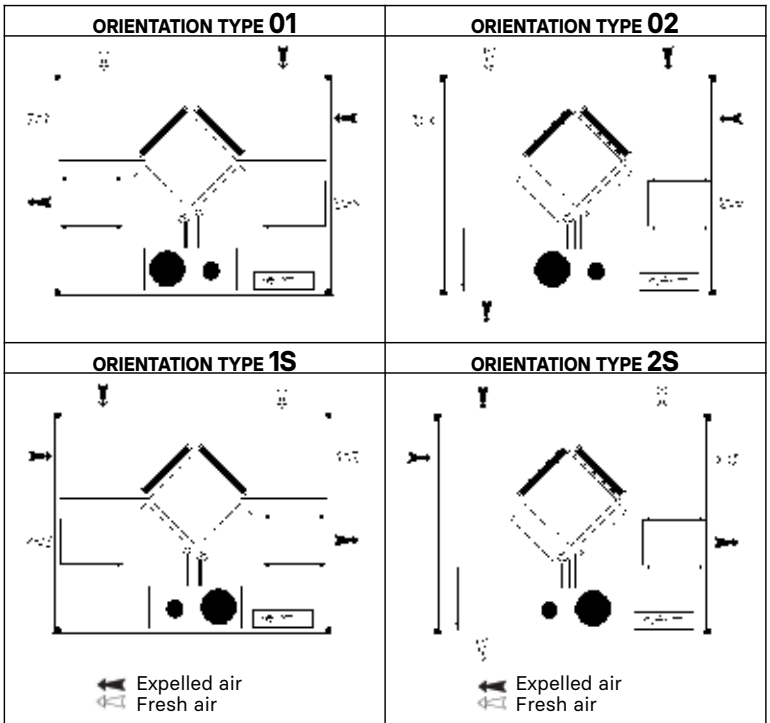

The illustrated guidelines concerning the machine seen from above

Electa-REK

Heat recovery unit

Air flow rate: 200 - 300 - 150/450 m³/h

Electa-REK UTR

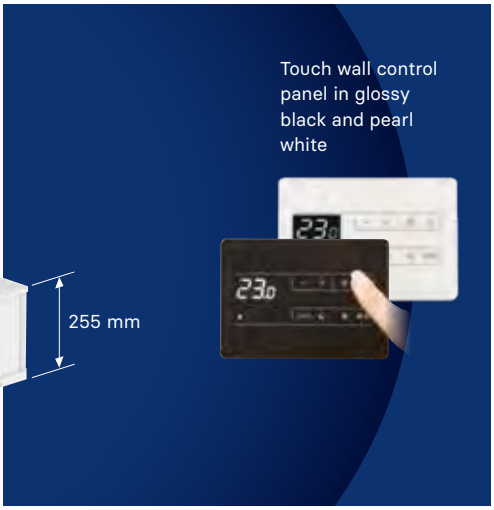

KEY FEATURES

- **Extremely thin: only 26 cm high for ceiling installation.**
- **Integrated air quality and humidity sensor.**
- **Very high efficiency filters in class ePM1 80%.**
- **High efficiency passive recovery unit >90%, in sensitive or enthalpy version.**
- **BLDC horizontal rotary compressor and constant-flow EC fan.**
- **Touch control as standard**

Fresh air terminal units with heat pump active thermodynamic recovery and opposing flow passive recovery.

CONSTRUCTION FEATURES

- Recovery unit:
  - First stage of heat recovery of static air-air type, sensitive or enthalpy, with opposing flows in very high efficiency polypropylene.
  - Second stage of heat pump active thermodynamic heat recovery (with R410A gas) consisting of high efficiency BLDC horizontal rotary hermetic compressor, evaporating and condensing coils with copper pipes and aluminium fins, electronic expansion valve and safety devices, 4-way valve for cycle inversion and dryer filter.
- Fans: UTR double-intake centrifugal fans with constant flow EC motor for fresh and expelled air; UTRR: EC radial fans with constant flow for fresh and expelled air, centrifugal fans with double-intake, with EC motor, for recirculation air.
- Filtering section: 80% ePM1 filters with low pressure drop air side renewal and ambient inlet, both removable at the bottom; 70% coarse filters on the recirculation side removable at the bottom, for UTRR.
- Self-supporting structure, double side sandwich panelling, internally galvanised sheet steel and externally painted (RAL 9003), with high density polystyrene insulation (20 mm thick). Circular inlets (Ø 200 mm) with sealing gasket for connection to the air ducts; lower condensate collection tank with double drain.
- Electrical adjustment and power panel integrated on the unit; electronic microprocessor control for fan speed management, room temperature setting, timed dirty filter management, air quality sensor management with flow modulation, summer/winter changeover and defrosting cycles.

VERSION

- UTR-S - Fresh air units with heat pump active thermodynamic recovery and opposing flow passive sensitive heat recovery.
- UTR-X - Fresh air terminal units with heat pump active thermodynamic recovery and opposing flow passive enthalpic heat recovery.
- UTRR-S - Fresh/recirculation air units with heat pump active thermodynamic recovery and opposing flow passive sensitive heat recovery.
- UTRR-X - Fresh/recirculation air units with heat pump active thermodynamic recovery and opposing flow passive enthalpic heat recovery.

CONTROLS SUPPLIED SEPARATELY: MANDATORY

One of the following controls is MANDATORY to operate the unit:

- KPUTB - Wall-mounted touch control panel, glossy black, to adjust room temperature, ON/OFF, summer/winter, Auto, Night, MIN, MAX speed, alarm signalling, with Wifi board, RS485 Modbus RTU interface and connection cable, up to 15 m from the unit.
- KPUTW - Wall-mounted touch control panel, pearl white, to adjust room temperature, ON/OFF, summer/winter, Auto, Night, MIN, MAX speed, alarm signalling, with Wifi board, RS485 Modbus RTU interface and connection cable, up to 15 m from the unit.

Electa-REK UTRR

Features

	MODEL			UTR-S 20	UTR-S 30	UTRR-S 15/45	UTR-X 20	UTR-X 30	UTRR-X 15/45
	Nominal fresh air flow	MAX	m³/h	235	318	150	235	318	150
	Fresh air flow	MED	m³/h	210	235	90	210	235	90
	Fresh air flow	MIN	m³/h	135	165	50	135	165	50
	Nominal recirculation air flow	MAX	m³/h	-	-	462	-	-	462
	Recirculation air flow	MED	m³/h	-	-	370	-	-	370
	Recirculation air flow	MIN	m³/h	-	-	280	-	-	280
	Available static pressure		Pa	100	100	100	100	100	100
❶	Sound pressure	MAX	dB(A)	40,0	41,5	42,0	40,0	41,5	42,0
	ELECTRICAL SPECIFICATIONS								
	Electrical supply		V-ph-Hz	230-1-50	230-1-50	230-1-50	230-1-50	230-1-50	230-1-50
	Max. absorption		kW	1,70	1,70	1,78	1,70	1,70	1,78
❷ ❹	**PERFORMANCE IN HEATING MODE**			**UTR-S 20**	**UTR-S 30**	**UTRR-S 15/45**	**UTR-X 20**	**UTR-X 30**	**UTRR-X 15/45**
	Static recovery minimum efficiency		temperature/enthalpy	85%	83%	87%	69% / 36%	64% / 34%	72% / 39%
	Passive recovery		kW	1,69	2,23	1,06	1,74	2,25	1,48
	Active recovery nom. heating capacity		kW	2,29	2,92	2,65	2,32	2,95	2,65
	Total heating capacity		kW	3,98	5,15	3,71	4,06	5,20	4,13
	Absorbed power		kW	0,75	0,95	0,88	0,74	0,93	0,88
	Overall COP			5,31	5,42	4,22	5,49	5,59	4,69
❸ ❹	**PERFORMANCE IN COOLING MODE**			**UTR-S 20**	**UTR-S 30**	**UTRR-S 15/45**	**UTR-X 20**	**UTR-X 30**	**UTRR-X 15/45**
	Static recovery minimum efficiency		temperature/enthalpy	77%	74%	82%	69% / 28%	64% / 25%	71% / 35%
	Passive recovery		kW	0,48	0,62	0,31	0,67	0,77	0,5
	Active recovery nom. cooling capacity		kW	1,98	2,37	2,30	1,98	2,38	2,3
	Total cooling capacity		kW	2,46	2,99	2,61	2,65	3,15	2,8
	Absorbed power		kW	0,68	0,84	0,75	0,67	0,83	0,75
	Overall EER			3,62	3,56	3,48	3,36	3,80	3,73
	DIMENSIONS AND WEIGHTS			**UTR-S 20**	**UTR-S 30**	**UTRR-S 15/45**	**UTR-X 20**	**UTR-X 30**	**UTRR-X 15/45**
	L - Width		mm	850	850	960	850	850	960
	H - Height		mm	255	255	260	255	255	260
	P - Depth		mm	1150	1150	1000	1150	1150	1000
	Weight		kg	82	82	75	82	82	75

Preliminary data at the following conditions:
❶ In open field, 1 m from the unit, according to EN 3744; available static pressure 50 Pa.
❷ Outdoor air – 5°C RH 80%; ambient air 20°C, RH 50%.
❸ Outdoor air 35°C, RH 50%; ambient air 27°C, RH 60%.
❹ At the nominal flow rate.

❹	**OPERATING RANGE**				
	Winter operating conditions	Indoor Air	10°C / 25°C	Outdoor Air	-20°C / 20°C
	Summer operating conditions	Indoor Air	18°C / 28°C	Outdoor Air	20°C / 38°C

UTRR 15/45

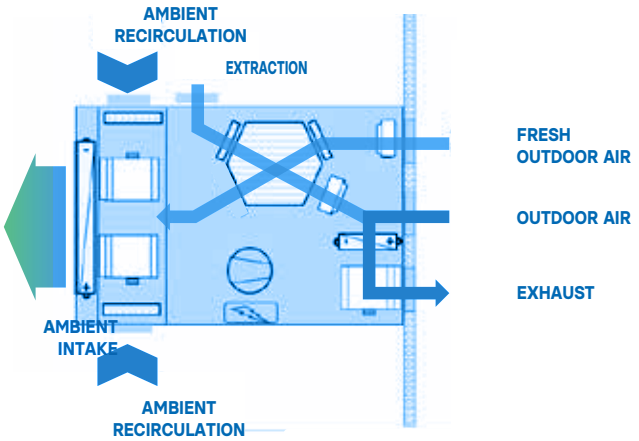

UTR 20-30

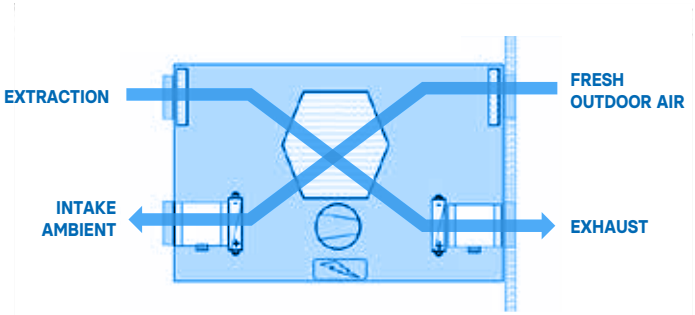

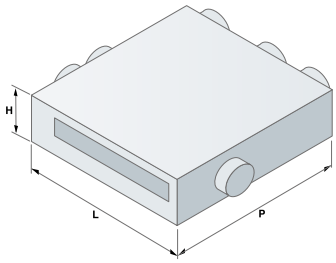

VMC-E

Heat recovery unit

Air flow rate: 250÷1.300 m³/h

KEY FEATURES

- **Extremely compact**
- **High efficiency recovery**
- **Very silent**
- **Brushless DC fans**

Fresh air terminal unit with counterflow static heat recovery.

CONSTRUCTION FEATURES

- Galvanised sheet steel self-bearing structure, insulated internally and externally.
- Recovery unit: thanks to a high yield static type heat exchanger with back-current flows consisting of flat layers of special paper that allow total heat exchange, thereby recovering both sensitive and latent heat. The air flows are kept separate with relevant sealing. Maintenance is easily performed on the heat exchanger and filters thanks to side extraction.
- By-pass motorised system of the recovery unit actuated automatically by the electronic control
- Air filtration in F9 efficiency class (with G3 pre-filter) on the fresh air and G3 filter on return air.
- Integrated dirty filter signal pressure switches
- Fans: fresh air inlet and centrifugal exhaust with BRUSHLESS EC motors that allow higher efficiency to be achieved in comparison to traditional motors with energy savings of up to 60%. 10-speed management option.
- Ducting connections with plastic round fittings.
- Incorporated electrical panel with electronic board to control the freecooling and fan functions.

SEPARATELY SUPPLIED ACCESSORIES

- KSBE1: electric pre-heating heater with defrost function complete with safety thermostats and control relay, which can be activated from the KPCM panel
- KSBE2: electric post-heating heater complete with safety thermostats and control relay, which can be activated from the KPCM panel

The two units cannot be managed at the same time, so they are one as an alternative to the other

CONTROLS

- KPST- Touch screen remote control panel
- KQSW- CO2 wall sensor for fan adjustment
- KUSW- Wall humidity sensor for fan adjustment

Features

	VMC MODEL		25	35	50	80	100	130
	Nominal air flow rate	m³/h	250	350	500	750	1000	1300
	Nominal available static pressure	Pa	90	140	110	140	140	140
	Total nominal absorbed power	W	80	130	150	320	390	500
	Total maximum absorbed current	A	0,5	0,6	0,6	1,4	2,1	2,7
❶	Sound pressure	dB(A)	34	37	39	42	43	44
	Electrical supply	V-ph-Hz	230-1-50	230-1-50	230-1-50	230-1-50	230-1-50	230-1-50
	Motor type		EC	EC	EC	EC	EC	EC
	Speed number		10	10	10	10	10	10
❹	Int S.F.P.	W/m³/s	812	670	547	865	881	873
❹	Declared type		NRVU-BVU	NRVU-BVU	NRVU-BVU	NRVU-BVU	NRVU-BVU	NRVU-BVU
	HEAT RECOVERY							
❷	Winter efficiency (temp/enthalpy)	%	73/65	74/65	76/67	76/65	76/62	74/59
❸	Summer efficiency (temp/enthalpy)	%	73/62	74/62	76/63	76/63	76/60	74/58
❹	Dry thermal efficiency	%	73	74	76	76	76	74
	ACCESSORIES							
	KSBE1-Heating capacity	kW	1	1	1,5	2,5	2,5	2,5
	KSBE1-stages	n°	1	1	1	1	1	1
	KSBE2-Heating capacity	kW	1	1	1,5	3	3	3
	KSBE2-stages	n°	2	2	2	2	2	2
	DIMENSIONS AND WEIGHTS		**25**	**35**	**50**	**80**	**100**	**130**
	Length	mm	814	814	894	1186	1199	1199
	Depth	mm	599	804	904	1134	1216	1216
	Height	mm	270	270	270	388	388	388
	Weight	Kg	30	37	43	71	83	83

Data at the following conditions:

❶ Sound pressure level assessed at 1 m, with all 4 air nozzles ducted, on the machine inspection side and under nominal operating conditions
❷ Nominal winter conditions: outdoor air: –5°C; 80% TH. Ambient air: 20°C; 50% UR.
❸ Nominal summer conditions: outdoor air: 32°C; 50% TH. Ambient air: 26°C; 50% UR.
❹ According to EU Regulation 1253/2014

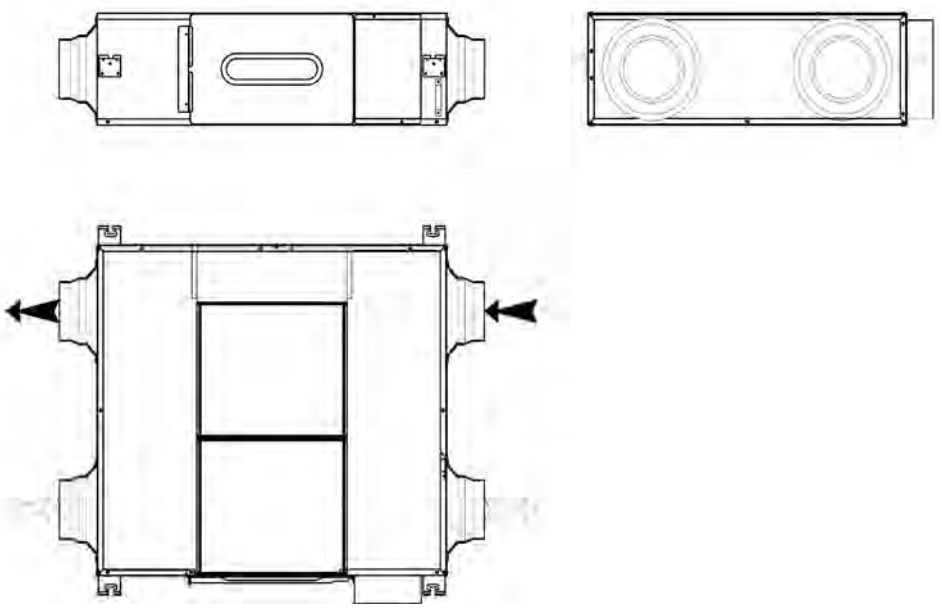

Full Controls

The Full Control adjustment system aims to meet all the adjustment requirements of our units in the UTNA - UTNR A/P and HE comfort range starting from the most basic up to fully-equipped units.

Main control logic settings

MAIN CONTROL LOGIC SETTINGS Temperature adjustment at a fixed delivery point (primary air)

The Tm fixed point probe controls the delivery temperature using the modulating actuator of the control valve.

"Sliding" adjustment of the delivery temperature according to the ambient set-point (all air)

Depending on the difference between the ambient temperature and the set-point, established at settable authority level, the delivery set-point is re-calibrated. This function allows the performance of a control loop with a high degree of difficulty to be improved, thereby reducing the delay with which the ambient/return probe indicates the interference that occurs in delivery and is used as a base when the ambient temperature is to be set.

Result

The air delivery temperature varies according to the difference between the actual ambient temperature and that prescribed.

Benefits for the end user

The ambient temperature control is faster and more accurate, and the gap on the ambient set-point is smaller than that achieved with separate ambient/return temperature adjustment.

Antifreeze protection function

The TAG antifreeze thermostat protects the coil from frost (in case of intervention) when the outdoor air damper closes and the unit s**tops**

Filter clogging monitoring

The cleanliness and healthiness of the filters is constantly monitored by the differential pressure switch as required by the relevant EU regulation

2-pipe systems

In case of the mixed coil, the season must be selected from the control panel or the remote selector. The S/W selector also lets you exclude antifreeze protection while the coil is powered by cold water.

4-pipe systems

The hot and cold valve control is in automatic sequence, with central dead band to prevent instability.

Delivery summer temperature compensation in relation to the outdoor one

Ambient/ return humidity adjustment

The humidity probe on the return line controls humidity. During winter, it adjusts the steam humidifier delivery. During the summer period it acts on the actuator of the cold coil control valve, thereby adjusting performance.

Free-cooling temperature

This type of function is ONLY possible if you have selected a unit with heat recovery and it is set to achieve maximum savings.

Energy will be saved in systems with internal foreign heat production in cooling mode since the typical outdoor temperatures of the winter or mid seasons (approx. 10 to 20°C), the ambient temperature regulator controls the outdoor air and exhaust dampers on opening and recirculation ones on closing, thereby eliminating the added heat with a corresponding percentage of outdoor air. The function must be activated on start-up.

UNIT		UTNA		UTNR A-HE	
FUNCTION		**AP**	**TA**	**AP**	**TA**
CONFIGURATIONS / FUNCTIONS	2-pipe single coil (Hot, Cold, Mixed)	•	•	•	•
	4-pipe second coil (Hot, Mixed)	•	•	•	•
	Fan control 1, 2 or 3V	•	•	•	•
	Fan control control (operated manually from the control panel or from the external input/potentiometer or according to the pressure/IAQ/Humidity probes)	•	•	•	•
	On/off damper control (operated electro-mechanically when the machine is switched on and the optional antifreeze thermostat, in case of alarm)	•	•	•	•
	Mixture chamber module damper control (potentiometer/from controller)	n/a	•	n/a	n/a
	Separate control for double vent.	n/a	n/a	•	•
	Recovery unit bypass command (for free-cooling control)	n/a	n/a	•	•
	Recovery unit antifreeze control	n/a	n/a	•	•
	On/off dehumidifier command	•	•	•	•
	Modulating dehumidifier command	•	•	•	•
	Coil on/off command Electric (ONLY 2-pipe versions alternative to the second hot coil for UTNA and UTNR)	•	•	•	•
	Coil modul. command Electric (ONLY 2-pipe versions alternative to the second hot coil for UTNA and UTNR)	OPT	OPT	OPT	OPT
PROBES	Antifreeze Thermostat	•	•	•	•
	Supply temperature probe	•	•	•	•
	Ambient/Return temperature probe and combined return/ambient temperature + humidity probe	•	•	•	•
	Ambient/Return Humidity Probe	•	•	•	•
I/O OPT.	IAQ input probe* (Modulating damper control or fan speed)	•	•	•	•
	Channel const. pressure probe input (Speed modulation of the fans on VAV systems with separate zone dampers or pressurised control)**	•	•	•	•
	Outdoor air temperature probe outlet (for supply set-point compensation, recovery/free-cooling bypass)	•	•	•	•
	Dp filter pressure switch input	n/a	•	n/a	•
	Remote temperature recalibration potentiometer input and remote damper positioning	•	•	•	•
	Input Remote E/I selection input (ONLY 2 pipes)	•	•	•	•
	Remote On/Off input	•	•	•	•
	Economy input (from external timer, micro window, badge reader, etc.)	•	•	•	•
	Ext. alarm input (general alarm, fire protection etc) for emergency stop	•	•	•	•
	Alarm repeat output (Relay)	n/a	n/a	n/a	n/a
	Thawing input from heat pump	•	•	n/a	n/a
	E/I switching output for heat pump	•	•	•	•
	Pump control 1 (auxiliary, not power, for the pump or generator to service the coil/circuit 1)	•	•	•	•
	Pump control 2 (auxiliary, not power, for the pump or generator to service the coil/circuit 2)	•	•	•	•
ADDITIONAL FUNCTIONS	Modbus serial communication	•	•	•	•
	Weekly time schedule	•	•	•	•
	Holiday schedule	•	•	•	•

** only with the Brushless EC fan
n/a: not available
OPT: option

Basic controls

User panels

With these accessories you can easily manage all active control functions by means of symbols and clear icons and intuitive including:

change the set-point, manage summer/winter seasonal switching, manage the ON/OFF power, manage the ventilation mode, display the temperature, humidity and all the values measured by the connected probes, set a weekly program schedule or a timer for prolonged absences (holiday mode), view alarms, reset alarms and manually position any motorised dampers in modulating control.

The features described above are common to all the following control panels

All Panel controls are used for box recessed installation (BTicino 506 type). You can customise the terminal to integrate it aesthetically in environments with the KCW or KCB plates according to the price list or the several Bticino series "Living" and "Light" plaques.

• KEPJGRAPH - with graphic LCD display with white front for wall mounting installation, 320x240 pixel resolution and 6 capacitive touch keys, the interfaces have an integrated alarm buzzer. Power supply 24 VAC 50/60 Hz Max. 4 VA not isolated or 12--> 30 VDC, max. 2 W not isolated.

Electrical panel in a resin case, with IP55 protection, compliant with IEC EN 60204-1, complete with:

• DDC programmable microprocessor controller that can manage up to 40 I/O with Rhoss software and configuration specifically designed to make sure the optimal automatic control of all functions can be managed on the machine, via continuous comparisons made between the set values and the temperature and humidity conditions detected by the sensors. The adjustment, optimised with proportional-type algorithms plus integral (PI), assures accurate and safe operation of the air handling unit.

The controller is equipped with a Real Time Clock to set the date, time and time program, with a backup battery to keep the saved data even in case of a prolonged power cut (up to 2 days). Interfaced with BMS Integrated as standard with Modbus RTU protocol.

• Main disconnecting switch.

• Fuse holder to protect single phase fan motors with power up to 1.6 kW with isolating function for phase and neutral on opening (*).

• Motor protection fuses for the motor of a rotary recovery, the 230/12V transformer and the 24V auxiliary circuit.

• Relay to control various utilities.

• Spring terminal blocks with removable connectors for quick connection of all components on the machine.

• Electrical supply 1F+N 230V 50Hz.

• Auxiliary power supply with a converter transformer 230/12-24V.

(*) An external panel with specific protection and drive devices must be added required for higher power and three-phase loads .

• KRFCS - Full Control power and regulation electrical panel for UTNB-UTNA-UTNR-UTNV Single-phase Max Pow. 2x1.6 kW.

• KDTR - Usable with all UTNA-V-R with 1 coil.

Simple and reliable controller to be installed in the supply duct, in the same case which already holds the temperature probe and is designed to handle simple air handling units operating at a supply fixed point. Operating range 0-50°C:

• KPOTR - Remote potentiometer for damper recalibration (in combination with KDTR).

AMBIENT regulators for wall mounting with software application, display, ambient sensor, RS485 serial board and clock with control of up to 9 I/O.

• KRCA1 - Ambient regulator with integrated temperature probe to control the following functions:

- 2 modulating coils, antifreeze, 1 modulating damper, 1 on/off resistance

- modulating coils, antifreeze, 1 modulating fan, 1 on/off resistance

- 2 modulating coils, antifreeze, 1 modulating resistance, 1 on/off fan

- 2 modulating coils, antifreeze, 1 modulating fan, recovery bypass

• KRCA2 - Ambient regulator with integrated temperature probe to control the following functions:

- 2 modulating coils, antifreeze, 1 on/off fan, 1 aux. on/off control

- 2 modulating coils, antifreeze, 1 on/off fan, recovery bypass, 1 aux. on/off control

- 2 modulating coils, antifreeze, 1 on/off resistance, recovery bypass, 1 aux. on/off control.

Air Handling Units

Air Handling Units

Modular Air Handling Units

ADV Modular Units 238
ADV Next Air 01-16

Custom Air Handling Units

Custom ADV 242
ADV Custom 240÷22920

Pool dehumidifiers

Dry-Pool 246
DAESY-DRESY-DTESY-DEESY 108-2140

ADV Modular Units

ADV Next Air 01-16

Air flow rate:
800÷41.000 m³/h

Modular air handling units.

KEY FEATURES

- **Highly performing new generation structure**
- **Energy efficiency of excellence**
- **Plug and play integrated intelligence**
- **Exclusive solutions exclusive for Indoor Air Quality**

The ADV Next Air range is developed from the new Rhoss air handling vision.
Innovative ideas and cutting-edge technology are the winning combination that characterise it.
This, together with our thirty years of experience in the sector, leads to the new innovative line of air handling units that looks to the future of air conditioning. The strength of the product lies in the use of creative, cutting-edge engineering solutions, preserving the qualitative excellence and the reliability traits that have made Rhoss a well-known name. The fully modular nature and the wide range of configurations come together in the Next Air range to create perfect balance between customisation and standardisation, flexibility and industrialisation.

STRUCTURE

- Sturdy and self-bearing structure made from one 50 mm thick single-piece sandwich panel, internally and externally hot galvanised sheet steel painted with oil-free polyester paint, highly resistant to corrosion. The internal surfaces are completely smooth to inhibit microbial proliferation and prevent the accumulation of dust.
- Insulation of self-extinguishing polyurethane base resins with a density of 48 kg/m3. Fire reaction Euroclass Cs3d0.
- The step-type full-face front inspection sandwich panels are housed in the profile seat, with thermal cut interruption, a soft PVC double gasket that simultaneously ensures tightness and prevents humidity, water or any other unwanted element from entering the machine.
- The fixing profiles are made of latest generation plastic material (PVC-RAU). Specifically made on Rhoss design, their geometry ensures perfect thermal insulation of the structure and complete interruption of thermal bridge, optimally resistance to exposure to sunlight (UV rays) and atmospheric agents, ensuring outstanding resistance to ageing.
- The condensate drain pans are made of magnesium and aluminium alloy sheet steel, ensuring excellent resistance to corrosion. They are installed inside the machine structure and are fully insulated.
  Thanks to the double inclination, full drainage of fluid is guaranteed thus avoiding any kind of unwanted stagnation.
- All units are suitable for both indoor and outdoor installation.

Mechanical features EN 1886 achieved by the ADV Next-Air Range
Mechanical Resistance D1
Leakage (-400Pa) L1 (M,R)
Leakage (+700Pa) L1 (M,R)
Bypass Factor Filters F9
Thermal Transmittance T2
Thermal bridge factor TB1

STANDARD SET-UPS

The standard supply for each section is:
- Holes for the passage of signal or power cables protected internally and externally by a multi-hole cable gland with IP 65D in order to prevent altering the mechanical performance of the machine and facilitate on site operations.

MAIN COMPONENTS

Heat recovery units
- Sensitive or enthalpic rotary recovery unit
- Cross-flow recovery unit with integrated bypass
- Cross-flow heat recovery unit with integrated indirect adiabatic cooling system
- Twin coil heat recovery unit
- Unidirectional regenerative heat recovery unit (RRMR)

Fans
- High efficiency backward blade fans
- EC Brushless free impeller fans
- Plenum fan free impeller fans

Filters
- Standard or Airsuite Biocide G4-ISO COARSE 55% pleated synthetic filters
- G1 flat metal mesh filters
- Standard or Airsuite Biocide rigid bag filters M6 ePM10 70%, F7 ePM1 50%, F8 ePM1 70%, F9 ePM1 85%
- Soft bag filters M6 ePM10 80%, F7 ePM10 80%, F8 ePM2,5 70%, F9 ePM1 85%
- Semi-absolute and absolute rigid bag filters E12 H13

Heat exchangers
- Water fed coils
- Electric coils

Humidifiers
- Disposable water evaporating pack humidifiers
- Recirculation water evaporating pack humidifiers
- Autonomous immersed electrode steam humidifiers with producer
- Set-up for the installation of other types of humidifiers

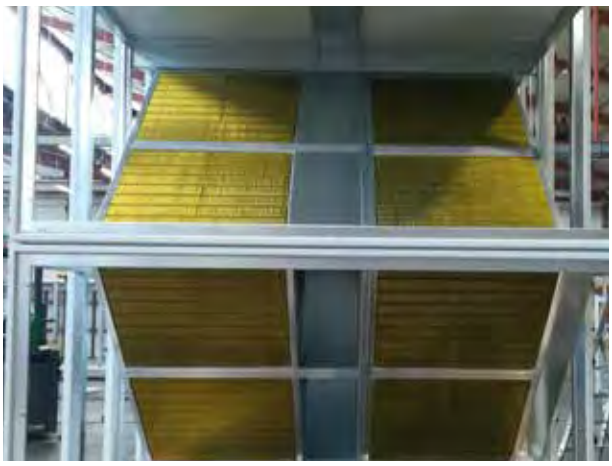

Various sections
- Outdoor/mixture/exhaust air intake dampers with
  - Servo-controllable dampers
  - Manual dampers
- Empty inspection sections
- Silencers

AVAILABLE VERSIONS:
- Type A Unidirectional machine
- Type B Machines with mixing chamber
- Type C Crossed flow heat recovery for primary air
- Type D Crossed flow heat recovery for all air systems
- Type E Rotary heat recovery for primary air
- Type F Rotary heat recovery for all air systems
- Type G Twin heat recovery for primary air
- Type H Twin heat recovery for all air systems
- Type I Indirect adiabatic heat recovery for primary air
- Type J Indirect adiabatic heat recovery for all air systems

FACTORY FITTED ACCESSORIES
- Dirty filters monitoring system
- Fan motors inverter and rotary recovery
- Fan compartment protection grilles
- Wired fan section disconnect switch
- Electronic control of fans at constant flow rate
- Indoor lighting system
- Anti-vibration fittings for ducting connection
- Rain and anti-intrusion grilles

The ADV Next Air range is also available in the Full Plug&Play version, which fully incorporates both the electrical power and control part and machine management, thus obtaining utmost comfort and minimum energy consumption. The Rhoss offer also includes all field components and elements needed for optimal control and management of the AHU.

ENERGY FUNCTIONS
- Automatic management of both temperature and enthalpy heat recovery systems
- Built-in "freecooling" and "freeheating" functions
- Cascade control of the heating/cooling devices
- Holiday and special day functions, with reduced set-point

COMFORT FUNCTIONS
- Temperature and/or humidity control with different seasonal set-points
- Compensation of the seasonal set-point
- Operation in comfort, pre-comfort or economy mode
- Management of the water temperature minimum limit;
- 4 daily time bands
- Automatic summer/winter, manual or based on the water temperature

FUNCTIONS BASED ON SYSTEM NEEDS
- Fan inverter check at constant speed, air flow rate or pressure or based on air quality
- Air quality check with CO2 and VOC probes;
- Management of 3- or 2-way modulating or pressure independent valves
- Management of pumps for pre-heating/cooling/ post-heating coils

CONNECTIVITY

The ADV Next Air range is fully interfaced and integrated with third-party BMS systems through Modbus, LonWorks and BACnet protocols.

ADV Modular Units

ADV Next Air 01-16

ADV Next Air MODEL		01	02	03	04	05	06	07	08
Air flow rates									
Air flow rate at 1.5 m/s	m³/h	890	1160	1430	1770	2250	2860	3610	4360
Air flow rate at 2 m/s	m³/h	1180	1550	1910	2360	3000	3820	4820	5820
Air flow rate at 2.5 m/s	m³/h	1480	1930	2390	2950	3750	4770	6020	7270
Air flow rate at 3 m/s	m³/h	1770	2320	2860	3550	4500	5730	7230	8730
Air flow rate at 3.5 m/s	m³/h	2070	2700	3340	4140	5250	6680	8430	10180
External front dimensions									
Base	mm	790	875	975	1075	1175	1275	1375	1480
Height	mm	520	640	720	720	760	840	840	950
Crossed flow heat recovery units									
Recovery at total air flow rate									
Nominal recovery air flow rate	m³/h	1300	1700	2100	2600	3300	4200	5300	6400
Minimum air flow rate	m³/h	600	800	1000	1300	1600	2100	2600	3200
Maximum air flow rate	m³/h	1700	2200	3000	3700	4900	5500	6900	8800
Dry yield with balanced flow rates	%	73,5	73,2	73,7	69,8	73,4	75,1	75,1	74,9
Efficiency EN 308	%	80,5	80,4	79,3	77,3	79	80,8	80,8	80,6
Recovery at partial air flow rate									
Nominal recovery air flow rate	m³/h	650	850	1050	1300	1650	2100	2600	3200
Minimum air flow rate	m³/h	300	400	500	600	800	1000	1300	1600
Maximum air flow rate	m³/h	850	1100	1350	1700	2200	3000	3700	4900
Dry yield with balanced flow rates	%	73,5	73,5	73,5	73,5	73,6	73,7	69,8	73,3
Efficiency EN 308	%	80,6	80,5	80,5	80,5	80,5	79,3	77,3	78,9
Rotary heat recovery									
Recovery at total air flow rate									
Sensitive recovery									
Nominal recovery air flow rate	m³/h	1150	1650	2100	2600	3300	4200	5250	6300
Balanced flow rate dry efficiency	%	73,0	73,1	74,4	74,9	74,9	74,5	73,0	73,1
Hygroscopic recovery									
Nominal recovery air flow rate	m³/h	1200	1700	2100	2600	3300	4200	5300	6400
Balanced flow rate dry efficiency	%	73,3	73,7	75,1	75,4	75,5	75,2	73,9	73,8
Recovery at partial air flow rate									
Sensitive recovery									
Nominal recovery air flow rate	m³/h	1150	1150	1150	1650	1650	2250	2900	3700
Balanced flow rate dry efficiency	%	73,0	73,0	73,0	73,1	73,1	73,2	73,0	73,0
Hygroscopic recovery									
Nominal recovery air flow rate	m³/h	1200	1200	1200	1750	1750	2400	3100	3950
Balanced flow rate dry efficiency	%	73,3	73,3	73,3	73,2	73,2	73,2	73,0	73,0

Features

ADV Next Air MODEL		09	10	11	12	13	14	15	16
Air flow rates									
Air flow rate at 1.5 m/s	m³/h	5180	6070	7160	8520	10160	12000	14450	17730
Air flow rate at 2 m/s	m³/h	6910	8090	9550	11360	13550	16000	19270	23640
Air flow rate at 2.5 m/s	m³/h	8640	10110	11930	14200	16930	20000	24090	29550
Air flow rate at 3 m/s	m³/h	10360	12140	14320	17050	20320	24000	28910	35450
Air flow rate at 3.5 m/s	m³/h	12090	14160	16700	19890	23700	28000	33730	41360
External front dimensions									
Base	mm	1575	1775	1925	1980	2085	2275	2535	2665
Height	mm	1000	1100	1100	1200	1320	1500	1500	1680
Crossed flow heat recovery units									
Recovery at total air flow rate									
Nominal recovery air flow rate	m³/h	7600	8900	10500	12500	14900	17600	21200	24700
Minimum air flow rate	m³/h	3800	4400	5200	5800	6900	8300	10000	11300
Maximum air flow rate	m³/h	10500	12300	14500	17600	21000	24800	29600	32000
Dry yield with balanced flow rates	%	74,9	74,9	74,9	73,4	73,4	73,4	73,4	73,0
Efficiency EN 308	%	80,6	80,6	80,6	79,0	79,0	79,0	79,0	78,6
Recovery at partial air flow rate									
Nominal recovery air flow rate	m³/h	3800	4200	5300	6400	7600	8900	10500	12800
Minimum air flow rate	m³/h	1900	2100	2500	2700	3000	3600	4200	5100
Maximum air flow rate	m³/h	5500	5500	6900	8800	10500	12300	14500	17600
Dry yield with balanced flow rates	%	73,3	75,1	75,1	74,9	74,9	74,9	74,9	74,9
Efficiency EN 308	%	78,9	80,8	80,8	80,6	80,6	80,6	80,6	80,6
Rotary heat recovery									
Recovery at total air flow rate									
Sensitive recovery									
Nominal recovery air flow rate	m³/h	7500	8900	10500	12500	14800	17600	21200	25900
Balanced flow rate dry efficiency	%	73,0	75,2	74,7	73,9	73,0	73,0	73,3	73,0
Hygroscopic recovery									
Nominal recovery air flow rate	m³/h	7600	8900	10500	12500	14900	17600	21200	26000
Balanced flow rate dry efficiency	%	73,8	75,7	75,3	74,7	73,9	74,0	74,2	73,8
Recovery at partial air flow rate									
Sensitive recovery									
Nominal recovery air flow rate	m³/h	4600	5250	5250	6300	7500	10150	11600	14800
Balanced flow rate dry efficiency	%	73,0	73,0	73,0	73,1	73,0	73,0	73,0	73,0
Hygroscopic recovery									
Nominal recovery air flow rate	m³/h	4900	5500	5500	6750	8050	10850	12400	15800
Balanced flow rate dry efficiency	%	73,0	73,3	73,3	73,1	73,0	73,0	73,0	73,0

Custom ADV

ADV Custom 240÷22920

Air flow rate:
850÷104.970 m³/h

Modular air handling units.

KEY FEATURES

- **Wide and versatile range**
- **Energy Saving Solutions**
- **Custom solutions**
- **ADVR Custom-Version with integrated heat regulation**
- **ADV Sanitisable Custom Hygienic-Version**

STRUCTURAL FEATURES

STRUCTURE

Panels made of double sandwich sheet metal with interposed expanded polyurethane insulation, a density of 46 kg/m³ and class 1 fire resistance; or rock wool with oriented and glued fibres, a density of 90 kg/m³ and class 0 fire resistance.
Several material combinations are available for the internal and external parts of the panel, such as pre-painted and pre-plasticised galvanised steel, AISI 304/316L stainless steel and aluminium. If the acoustic aspect is a decisive factor, together with a careful selection of the silencers, high sound absorption capacity panels are suggested.
Load-bearing structure consisting of anticorodal extruded aluminium sections for concealed screws with double fins and a chamber to guarantee no interruptions in the sections.
Continuous base under each aluminium section.
The framework inside the unit is made of galvanised sheet steel/aluminium or AISI 304 stainless steel, depending on requirements.
Inspection doors in line with the various sections are equipped with antipanic handles opening from the inside and the outside.
Outdoor versions: they are equipped with a roof with the same finish as the outer panels of the machine.
Side technical compartments are available in the treatment sections on request.

COMPONENTS

DAMPERS AND MIXING CHAMBERS
Calibration dampers with opposing movement fins, with aluminium aerofoil, tightness class 2,3 or 4.
Mixing chambers with two or three dampers
FILTERS
Filters available:
• Particulate filters ISO Coarse 30,50,55;ISO ePM10 70,80%;ISO ePM2.5 70%;ISO ePM1 50/70/85%;E10,E12,H13,H14
• Biocide filters Airsuite ISO Coarse 55;ISO ePM1 50/70/85%
Activated carbon filters are also available for chemical and physical deodorisation and absorption of gaseous and organic vapours.
Accessories: pressure plugs, differential pressure switches and/or analogue pressure gauges
COILS
Carrier fluids: water, glycolated water, vapour; overheated steam; direct expansion or electric
• In standard versions, the heat exchange coils are package-type with copper pipes and aluminium fins and can be removed on guides. Available options
Coils with the materials of the pipes and fins made of:
• pre-painted copper/aluminium,
• copper/copper,
• copper/tinned copper,
• iron/aluminium,
• entirely made of stainless steel.
Accessories: Drop separators: polypropylene, galvanised steel, aluminium and stainless steel droplet separators can be selected according to your needs.
FANS
• High efficiency belt and pulley backward blade fans
• Free impeller fans with IE5 EC Brushless motors
• Free impeller Plenum fans with IE3-IE4 asynchronous motors
Special versions:
Epoxy paint finish for aggressive atmospheres;
Versions entirely made of stainless steel;
Motors compliant with the ATEX Standard;
Accessories: a wide range of accessories is available for fan adjustment and control
SILENCERS
Consisting of highly sound-absorbing mineral wool baffles covered in glass fibre to protect against flaking. Various lengths are available to meet all noise reduction requirements.
Available options
Version with melinex-coated baffles and micro-stretched mesh.
HUMIDIFIERS
Adiabatic humidifiers
• Evaporating pack implemented in versions with disposable or pump recirculated water. The evaporating pack is available in cellulose paper or Sanifloc flocked PVC, with 100 to 200 mm thicknesses
• With nozzles in versions with disposable or pump recirculated water
• High pressure atomising humidifiers: high efficiency and hygienically safe system;
Isothermal humidifiers
Steam humidifiers are intended for the following supplies:
• Only if the humidification section is set up, including: the condensation drain pan along the entire section and a drop separator downstream of it.
• With vapour distributor suitable for working with vapour at atmospheric pressure

• Standalone vapour producers with immersed electrodes, electric resistances or gas powered.
• With vapour distributor and control valve suitable for working with vapour supply pressures from 0.2 to 5 bar.

HEAT RECOVERY UNITS

•Crossed or opposed flow plate heat recovery units with or without integrated by-pass damper for free-cooling
Available options
Acrylic protection for environments with aggressive atmosphere
Extra sealing: to guarantee enhanced sealing between the two air flows.

• Rotary heat recovery units
at fixed or variable speed
Available options
Condensing rotor; hygroscopic enthalpy; enthalpy of absorption
The rotor can also be equipped with a special protection against corrosion from atmospheric or chemical agents.

• Twin coil heat recovery units
• Unidirectional regenerative heat recovery units
• Indirect adiabatic heat recovery units

VERSIONS

• STANDARD Series with a single fan with a rectangular section.
• NARROW Series with a single fan with a square section: useful to minimise the footprint taken up by the CTA.
• LOWERED Series with a combined fan: useful to minimise the total height of the CTA.
• VERTICAL Series.

SIZES

• A total of 77 sizes are available, divided into standard, narrow and combined ranges.

ADVR Custom

Rhoss's integrated adjustment ensures:
No access related problems to install the components in the best position for the unit to work.
Extremely simplified installation and minimised time related factors.
Rhoss becomes the only partner, responsible also for CE certification of the machine.
ADVR Custom air handling units are supplied complete with power and regulation electrical panels as well as all in-field functional elements necessary to manage the specific application required, which are intended to be installed, calibrated, and electrically connected: All the units are tested in the factory, where the electrical connections and the movements of the mechanical adjustment parts are checked along with the logic functions, electromechanical interactions, and software compliance with requirements.

Main technical features

ELECTRICAL PANEL installed on the machine, complete with programmed microprocessor regulator, transformers, drives for power control of the various utilities, safety devices and signal lights.
CONTROL PANEL with LCD display and keypad, messaging and custom settings for the specific application.
HYDRAULIC ASSEMBLIES for each coil, including 2 and 3 way, high quality, shut-off motorised valves and 2-way balancing valves on the bypass.
ACTUATORS FOR AIR DAMPERS.
Temperature, humidity and air quality SENSORS selected according to the specific requirements of the system.
Dirty filter or no air flow signal **PRESSURE SWITCHES.**
AIR ANTIFREEZE THERMOSTAT.
Modulating or On/Off adiabatic or isothermal **CONTROL OF THE HUMIDIFIERS**, as required.
AUTOMATIC AIR FREE-COOLING, RECIRCULATION/ MIXING CONTROL.
Plate, rotary, twin, unidirectional regenerative, direct and indirect adiabatic heat **RECOVERY UNIT MANAGEMENT.**
MANAGEMENT OF FANS at constant revs, constant flow rate, constant pressure in the duct or in the room.
Management of fans with a double motor or twin fan units, one in stand-by for the other.
INVERTERS that can be configured for panel, potentiometer, constant pressure or flow rate control.
They have been specifically selected to obtain low harmonic distortion in compliance with the European Directive
IEC/EN 61000-3-12.

Available functions and options

The regulator has daily and weekly time bands and a clock with a buffer coil. It automatically controls all functions, if specifically requested, including:
• Automatic management of free-cooling, recirculation/ mixture or heat recovery on the sensitive or enthalpy air, depending on the selected machine configuration.
• Management of the "BOOST" function to reduce the time required for the system to be fully operational
• Compensation of the delivery set-point in relation to the outdoor temperature.
• Checking the delivery temperature in cascade according to the temperature detected on the return line/in the room.
• Electric heating coils On/Off or modulating control.
• Smooth management of enthalpy humidification and dehumidification resulting in maximum energy efficiency, without having to (Inaccurately) detect the saturation temperature.
• Operation based on freely programmable weekly time bands.
•Remote re-calibration potentiometers to control the ambient temperature, the opening of the dampers and fan inverter control.
•Remote keypad.
•Ambient panel for simplified use.
•Main alarm.
•Remote On/Off.
•Possibility of customising the alarm functions.
Interface
Rhoss ADVR CTA units can be interfaced, through appropriate additional modules, with Modbus, Lonwork, Bacnet, TCP/IP protocols and, therefore, directly with all the main BMS systems

ADV CUSTOM HYGIENIC

ADV Custom Hygienic range was designed according to high engineering standards and is ideal for applications where cleanliness and hygiene requirements are a must.
The units have been awarded the Hygiene compliance certificate for Air Handling Units by TUV NORD according to standards VDI 6022 Part 1 and DIN 1946 Part 4.
The air flow features and mechanical performance are certified by Eurovent according to standards EN1886 and EN13053.
The VDI 6022 Guideline contains the minimum hygiene requirements for HVAC systems, ventilation and air handling units for design, manufacture, operation, management and maintenance aspects.
It therefore also defines the hygiene requirements of Air handling units regarding: usable materials, components, manufacturing, mechanical features, accessibility and serviceability, in accordance with the highest technical standards.

STRUCTURE

The entire machine can be inspected through large access doors. Each section that is subject to frequent maintenance can be supplied with lighting and a large double-walled porthole to facilitate a visual inspection.
The internal structure is completely free of sharp edges or protrusions and the profiles used are completely rounded. Thereby, air friction on the surfaces is reduced together with the accumulation of dirt or washing liquid inside the unit.
The materials available for the panelling and framework guarantee levels of chemical resistance and bacterial cleanliness required for the monitoring of contamination.
The condensation drain pans are included along the entire length of the machine for all the components involved in the flow to be cleaned

AIR FILTERS

The filtration medium of the filters installed by Rhoss is microbiologically inert. The sealing gaskets are only of non-porous closed cell type.
The filters are housed in a rigid subframe which assures mechanical stability and minimises mechanical stress in the filtration medium, thereby preventing undesired filter breakage.

With the front filter extraction option, Rhoss ensures a very low filter bypass factor (class F9) and safe maintenance, which can be performed from the "clean" side of the air flow. The drain tank under the section also assures the filter module is completely sanitisable.
A special high performance frame is available for absolute filters in addition to, if required, machine set-up to perform the DOP test on site.

Rhoss supplies Air'Suite® biocidal filters for this range of air handling units as well. This unique solution on the market allows decontamination from microbiological agents (bacteria, moulds, viruses, algae, etc.) to be achieved in the air and the filtering device as well.
FANS
The Plenum fans – both with AC and EC Brushless motors – represent the ideal solution in these applications due to a number of aspects:
-no transmission belts make it a "clean" component, eliminating all fouling problems related to belt chalking
-the free impeller with no auger makes it easily accessible and cleanable
-the pressure outlet on the bell mouth allows the fan's working point to be read with the utmost ease and precision and to set it to constant flow rate or pressure as usually required in such environments.
To increase redundancy and reliability of the system, Rhoss provides the dual fan unit solution both in common chamber and separate chambers, thereby providing the designer with the highest freedom of choice.

HUMIDIFIERS

Steam humidification with autonomous producer with immersed electrodes/electric heaters/gas.
Dispensing mains steam nozzles suitable for hospital environments.
High pressure adiabatic humidifiers are available for certain applications that allow an accurate control to be performed on the ambient humidity without compromising the cleanliness of the air.
Adequate distances between the components are calculated for all the humidification sections in order to guarantee correct absorption of the steam itself

HEAT EXCHANGERS

The heat exchangers are equipped with a special inspection door with spotlight and inspection window.
The frame of the coils can be selected made of aluminium, AISI 304 or 316 L steel, so as to prevent corrosion from the cleaning liquids used. Also the coil fins can be selected in different corrosion-proof materials.

HEAT RECOVERY

All heat recovery units are designed to meet the design restrictions of efficiency and pressure drops with a special focus on the machine's fluid dynamics.
They are easily and fully accessible for easier cleaning and maintenance and the materials used comply with the requirements of VDI 6022.
The standard does not give specific guidelines on the recovery type to be used, leaving this choice up to the skills and assessments of the designer.
In critical applications or under controlled contamination, where air recirculation and mixing of the two air flows is not permitted, recovery with twin coils remains the only solution that assures complete separation between delivery and return, preventing any type of leakage between the two.

HEAT REGULATION

As for all aspects related to adjustment and control logics, when Rhoss provides the air handling unit complete with integrated heat regulation, the following is assured:
compliance with all safety aspects related to machine access for routine and special maintenance
the use of materials approved by the legislation in the hydraulic part as well as the adjustment and power wiring part
the implementation of appropriate adjustment logics for the type of application and the required degree of hygiene
Qualified personnel to perform the first machine start-up in a workmanlike manner.

Features

INDOOR OUTDOOR DUCTED EUROVENT CERTIFIED PERFORMANCE AHU N° 09.07.361 Range ADV www.eurovent-certification.com

NARROW ADV SERIES

MODEL		371	471	541	661	741	881	1071	1241
Air flow rate at 2.5 m/s	m³/h	1.300	1.700	1.950	2.400	2.700	3.200	3.850	4.500
Front dimension B	mm	730	730	770	810	870	880	880	1.030
Front dimension H	mm	680	740	740	800	800	900	940	980
MODEL		**1461**	**1751**	**2021**	**2361**	**2831**	**3371**	**3941**	**4571**
Air flow rate at 2.5 m/s	m³/h	5.300	6.300	7.300	8.500	10.200	12.200	14.000	16.500
Front dimension B	mm	1.030	1.030	1.050	1.220	1.410	1.610	1.610	1.630
Front dimension H	mm	1.120	1.280	1.310	1.340	1.350	1.350	1.520	1.700
MODEL		**5441**	**6561**	**7611**	**9131**	**10711**	**12751**	**15041**	**18361**
Air flow rate at 2.5 m/s	m³/h	19.500	23.500	27.500	33.000	38.500	46.000	55.000	66.000
Front dimension B	mm	1.740	2.020	2.150	2.500	2.780	2.900	3.350	3.800
Front dimension H	mm	1.880	1.880	2.000	2.000	2.060	2.300	2.300	2.420

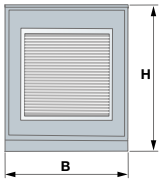

STANDARD ADV SERIES

MODEL		240	300	380	440	570	710	800	920
Air flow rate at 2.5 m/s	m³/h	850	1.080	1.360	1.700	2.050	2.450	2.850	3.300
Front dimension B	mm	730	820	950	950	970	1.080	1.080	1.080
Front dimension H	mm	630	630	660	720	720	750	820	880
MODEL		**1070**	**1220**	**1380**	**1530**	**1720**	**2080**	**2300**	**2500**
Air flow rate at 2.5 m/s	m³/h	3.850	4.400	4.950	5.500	6.200	7.500	8.300	9.000
Front dimension B	mm	1.230	1.360	1.360	1.430	1.480	1.550	1.630	1.630
Front dimension H	mm	880	880	920	920	990	1.070	1.070	1.170
MODEL		**2920**	**3270**	**3600**	**4300**	**5250**	**6060**	**7500**	**8480**
Air flow rate at 2.5 m/s	m³/h	10.500	12.000	13.000	15.500	19.000	21.800	27.000	30.500
Front dimension B	mm	1.630	1.650	1.650	1.930	2.130	2.310	2.700	2.850
Front dimension H	mm	1.300	1.300	1.400	1.560	1.560	1.700	1.700	1.700
MODEL		**9750**	**11400**	**12600**	**13900**	**16580**	**19860**	**22920**	
Air flow rate at 2.5 m/s	m³/h	35.000	41.000	45.500	50.000	59.500	71.500	82.500	
Front dimension B	mm	3.000	3.000	3.200	3.600	3.850	4.040	4.540	
Front dimension H	mm	1.870	2.050	2.210	2.210	2.210	2.420	2.490	

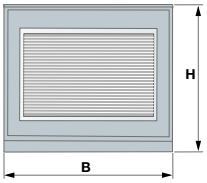

LOWERED ADV SERIES

MODEL		420	630	830	990	1180	1400	1580	1850
Air flow rate at 2.5 m/s	m³/h	3.780	5.620	7.420	8.910	10.690	12.630	14.250	16.630
Front dimension B	mm	1.400	1.550	1.800	1.950	2.100	2.250	2.500	2.600
Front dimension H	mm	750	800	900	950	1.000	1.100	1.200	1.250
MODEL		**2210**	**2550**	**2860**	**3190**	**3650**	**4220**	**4830**	**5550**
Air flow rate at 2.5 m/s	m³/h	19.870	22.950	25.750	28.720	32.880	38.010	43.470	49.950
Front dimension B	mm	2.700	2.800	2.950	3.100	3.250	3.550	3.850	4.105
Front dimension H	mm	1.350	1.400	1.500	1.550	2.650	1.700	1.800	1.900
MODEL		**6240**	**7060**	**8100**	**9220**	**10400**	**11660**		
Air flow rate at 2.5 m/s	m³/h	56.160	63.500	72.900	82.940	93.630	104.970		
Front dimension B	mm	4.405	4.610	4.910	5.210	5.510	5.810		
Front dimension H	mm	1.950	2.100	2.200	2.350	2.500	2.600		

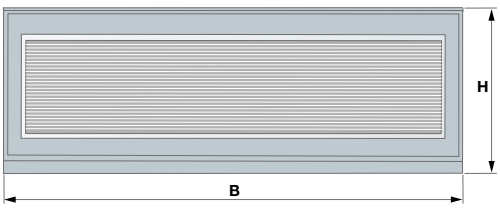

Dry-Pool

DAESY-DRESY-DTESY-DEESY 108-2140

Dehumidification capacity: 8-140 l/h

KEY FEATURES

- **R410A**
- **Integrated adjustment**
- **Double panels**
- **Thermal cut profiles**
- **Version with brushless EC fans**

Air and/or water cooled centrifugal fan POOL DEHUMIDIFIERS. Range with scroll hermetic compressors and R410A refrigerant gas.

CONSTRUCTION FEATURES

- Frame and load-bearing structure: extruded profiles aluminium alloy with a cross section of 40 x 40 mm, thermal cut-type with concealed screws. Balloon sealing gaskets fitted onto the profile. • Aluminium base.
- Panelling: 25 mm double sheet steel (galvanised steel plate on the inside and pre-painted with RAL 9002 on the outside). Hot-injected polyurethane insulation (average density 40 kg/m³).
- Compressor: scroll type, rotary, hermetic complete with thermal protection and casing heater.
- Evaporating coil: made with copper pipes and fins with a condensate drain pan.
- Condensing coil: made with copper pipes and aluminium fins.
- Water side heat exchanger (DRESY-DTESY-DEESY): braze-welded plates in special stainless steel for chlorinated water or tube and shell in Cu/Ni for water treated with saline chlorination. The heat exchanger in the DEESY models features stainless steel braze-welded plates that are not suitable for chlorinated water. Water flow differential pressure switch.
- VM EC - Brushless EC type of delivery fan with impeller made of corrosion resistant composite plastic with tipped curved aerofoil blades.
  Static and dynamic balancing of the entire assembly (motor/impeller), built in accordance with DIN ISO standard 1940. G6.3 balancing grade.
  External electronic commutation rotor motor (EC) with integrated electronics and protection against overloads due to active temperature management.
  Programmable relay to signal faults. Integrated motor protection and motor heating operation.
  IP54 motor protection rating, thermal class 155.
  Greater energy efficiencies than the target values of the second tier (2015) of EU Regulation 327/2011, regarding the application methods of European Directive 2009/125/EC.
  In compliance with product EMC and EC regulations.
  Motor and fan are fixed to a sturdy and compact structure in galvanised sheet steel including galvanised steel intake bell mouth and integrated pressure probe to measure the air flow rate.
  The fan is fitted with constant flow rate control and a display of the working point. Maximum available static pressure (referred to D~ESY + BA+ DAHR configuration)=500Pa.
- Filters: class G3 fitted inside the intake.
- Cooling circuit: separate from the aeraulic circuit and complete with a dryer filter, humidity indicator, high and low gas pressure gauges, load connections, high and low pressure side safety pressure switch, thermostatic expansion valve, liquid receiver (DRESY-DTESY-DEESY version), high pressure safety valve and R410A refrigerant load.
- Electrical panel: preset for 230V-1ph+N-50Hz power supply (mod. 108 single-phase) and 400V-3ph+N-50Hz (mod. 108-2140 three-phase). It is complete with master switch with door-lock device, circuit breaker switches, power contactors, auxiliary circuit protection fuses, microprocessor electronic control sheet.

VERSIONS

- DAESY: dehumidifier with 100% pool air side heat exchange.
- DRESY: dehumidifier with 45% pool water side recovery unit.
- DTESY: dehumidifier with 100% pool water side recovery unit.
- DEESY: dehumidifier with 100% pool water side recovery unit and possibility of 100% heat exchange on an external dry-cooler.

OPTIONS

- Pre-painted steel roof for outdoor installation.
- Intake opposite side horizontal air delivery.
- Intake side horizontal air delivery.

Features

DAESY

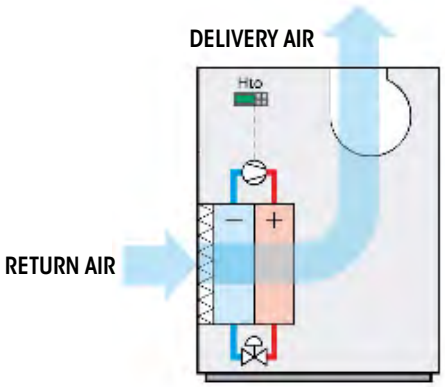

DRESY/DTESY/DEESY

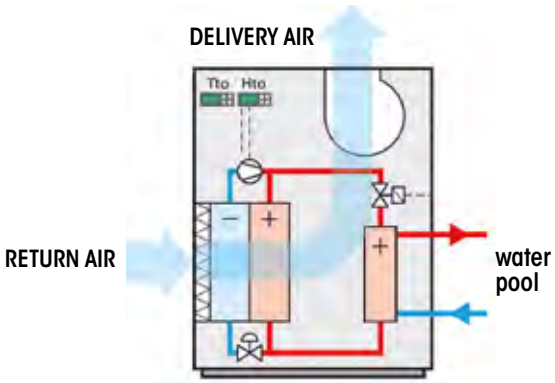

DRESY/DTESY/DEESY+BA

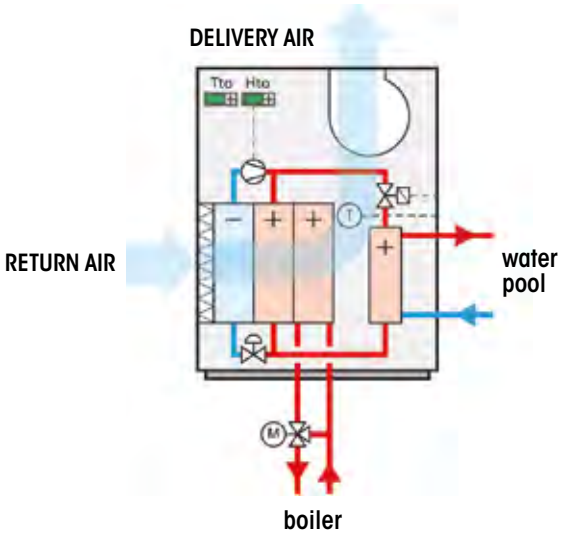

FACTORY FITTED ACCESSORIES

- FM M6 - High efficiency compact delivery air pre-filters, Class(EN 779:2012) M6/ ePM10 75%(iso 16890), glass fibre filtration medium, to replace standard G3 / ISO Coarse 50%.
- BRA (*) - Integral hot water coil complete with 3-way valve fully managed by micro-processor and 2-way balancing valve on the bypass.
- BA EXT - Technical compartment to house the BA accessory in machines installed outdoors.
- BA RAP (***) - Additional hot water coil in copper/ pre-painted aluminium version.
- BA BRR (***) - Additional copper/copper hot water coil.
- RAP (***) - Copper/pre-painted aluminium condensing coil.
- BRR (***) - Copper/copper condensing coil.
- BE (**) - Supplementary electrical coil managed by micro-processor with step input logic.
- DSP Base - Double humidity setpoint through digital input.
- DSP Ev - Double humidity setpoint through digital input.

SEPARATELY SUPPLIED ACCESSORIES

- KFM F8 - Additional unit with high efficiency compact delivery air pre-filters, Class (EN 779:2012) F8 / ePM1 65% (iso 16890), glass fibre filtration medium.
- KUSB Ev - RS485/USB serial converter for Advanced control.
- KRS485 Ev - RTU Modbus protocol RS485 serial interface for Advanced control.
- FTT10 Ev - Lon serial interface (standard electric FTT10) for Advanced control.
- KBE - Serial interface for Bacnet ip protocol.
- KBM - RS485 interface for Bacnet ms/tp protocol.
- KTR Ev - Remote keypad for Advanced control. The remote keypad is not available for machines fitted with basic control.
- KRJ1220 - 20 m-long connection cable for KTR.
- KRJ1230 - 30 m-long connection cable for KTR.
- KRJ200 - KTR remote control kit for distances between 50 and 200 m.

(*) Not available together with the BE accessory.
(**) Not available together with the BA accessory.
(***) Accessory that requires longer delivery time, please check when ordering.
(~) Extended to all A, R, T, E versions.

FRESH AIR HANDLING ADDITIONAL MODULES.

DAFC: FREE-COOLING MODULE.

CONSTRUCTION FEATURES

• Structure and frame: extruded aluminium alloy profiles with 40x40 mm thermal cut section and 25 mm thick panelling in double sheet steel (galvanised on the inside and pre-painted on the outside) with interposed injected polyurethane insulation with high soundproofing and insulating performance. Fit-on sealing gaskets in balloon type profile.
• Motorised dampers: with aerofoil aluminium. The 3 dampers (exhaust, recirculation, outdoor air intake) are sized for 100% of the flow rate and supplied with factory fitted modulating actuators.
• VR EC: Brushless EC type RETURN fan with impeller made of corrosion resistant composite plastic with tipped curved aerofoil blades.
• Static and dynamic balancing of the entire assembly (motor/impeller), built in accordance with DIN ISO standard 1940. G6.3 balancing grade.
• External rotor motor with electronic commutation (EC), with integrated electronics and protected against overload through active temperature management.
• Programmable relay for reporting faults. Integrated motor protection and motor heating operation.
• Motor with IP54 protection rating, thermal class 155.
• Energy efficiencies higher than the second phase objectives (year 2015) of EU Regulation 327/2011, on the methods of application of European Directive 2009/125/EC.
• Complies with product EMC and EC Standards.
• Motor and fan are fixed to a sturdy and compact structure in galvanised sheet steel including galvanised steel intake bell mouth and integrated pressure probe to measure the air flow rate
• The fan is equipped with constant flow rate control and work point display.
• Maximum available static pressure (referred to DAHR configuration)=500Pa

DAFC - FACTORY FITTED ACCESSORIES

• EXT: pre-painted steel roof for outdoor installation.

DAHR: HEAT RECOVERY MODULE.

CONSTRUCTION FEATURES

• Structure and frame: extruded aluminium alloy profiles with 40x40 mm thermal cut section and 25 mm thick panelling in double sheet steel (galvanised on the inside and pre-painted on the outside) with interposed injected polyurethane insulation with high soundproofing and insulating performance. Fit-on sealing gaskets in balloon type profile.
• Heat recovery: static with crossed flow in horizontal versions, with pre-painted aluminium heat exchanger pack, complete with condensate drain pan and support frame. Nominal yield no less than 55%. 48 thick filter (mounted on outdoor air intake) with G3/ISO class Coarse 50% corrugated synthetic cells
• Motorised dampers: with aerofoil aluminium. The 4 dampers (bypass, exhaust, recirculation, outdoor air intake) are sized for 100% of the flow rate and supplied with factory fitted modulating actuators.
• VR EC: Brushless EC type RETURN fan with impeller made of corrosion resistant composite plastic with tipped curved aerofoil blades.
• Static and dynamic balancing of the entire assembly (motor/impeller), built in accordance with DIN ISO standard 1940. G6.3 balancing grade.
• External rotor motor with electronic commutation (EC), with integrated electronics and protected against overload through active temperature management.
• Programmable relay for reporting faults. Integrated motor protection and motor heating operation.
• Motor with IP54 protection rating, thermal class 155.
• Energy efficiencies higher than the second phase objectives (year 2015) of EU Regulation 327/2011, on the methods of application of European Directive 2009/125/EC.
• Complies with product EMC and EC Standards.
• Motor and fan are fixed to a sturdy and compact structure in galvanised sheet steel including galvanised steel intake bell mouth and integrated pressure probe to measure the air flow rate.
• The fan is equipped with constant flow rate control and work point display.
• Maximum available static pressure (referred to DAHR configuration)=500Pa.
• EXT: pre-painted steel roof for outdoor installation.

DAHR - FACTORY FITTED ACCESSORIES

• FAE M6: high efficiency compact outdoor air pre-filters, Class (EN 779:2012) M6 / ePM10 75%(iso 16890), glass fibre filtration medium, to replace the standard G3 / ISO Coarse 50%
• EXT: pre-painted steel roof for outdoor installation.

DAHR - Separately supplied accessories
• KFR M6: additional unit with high efficiency compact return air pre-filters, Class (EN 779:2012) M6/ ePM10 75%(iso 16890), glass fibre filtration medium,

ATTENTION: additional outdoor air handling modules must be ordered together with the dehumidifier as they affect the electronics. It is not possible to order the two modules at different times.

Examples of combinations between the dehumidifier and the additional module

DRESY/DTESY + BA + DAFC

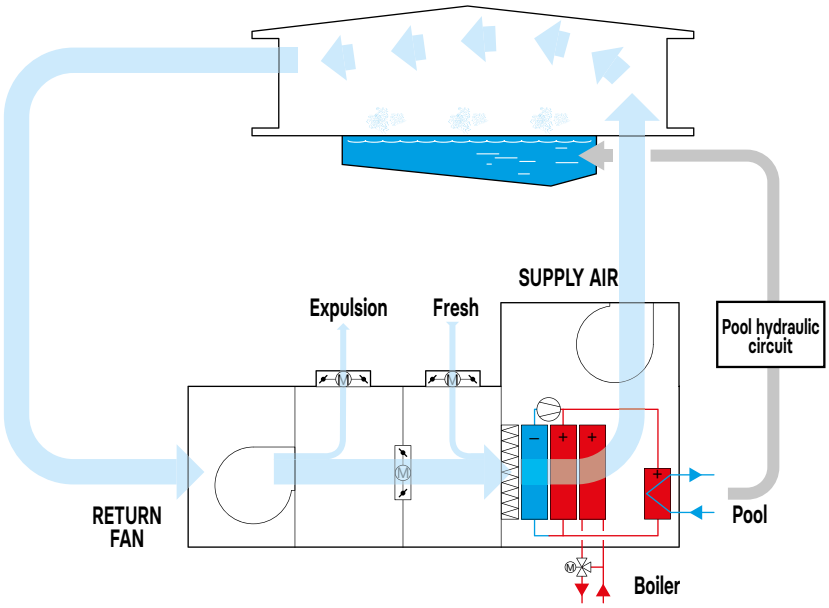

DRESY/DTESY + BA + DAHR

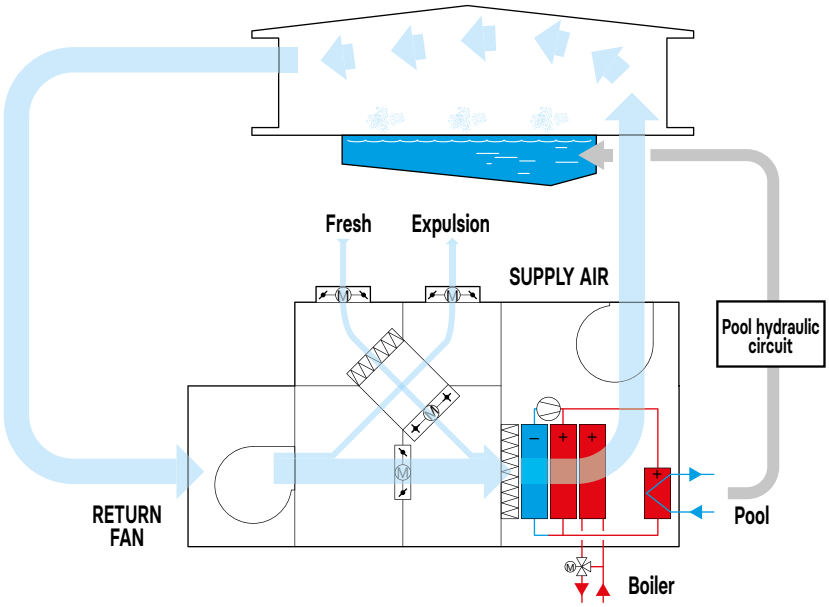

DEESY + BA + DAHR

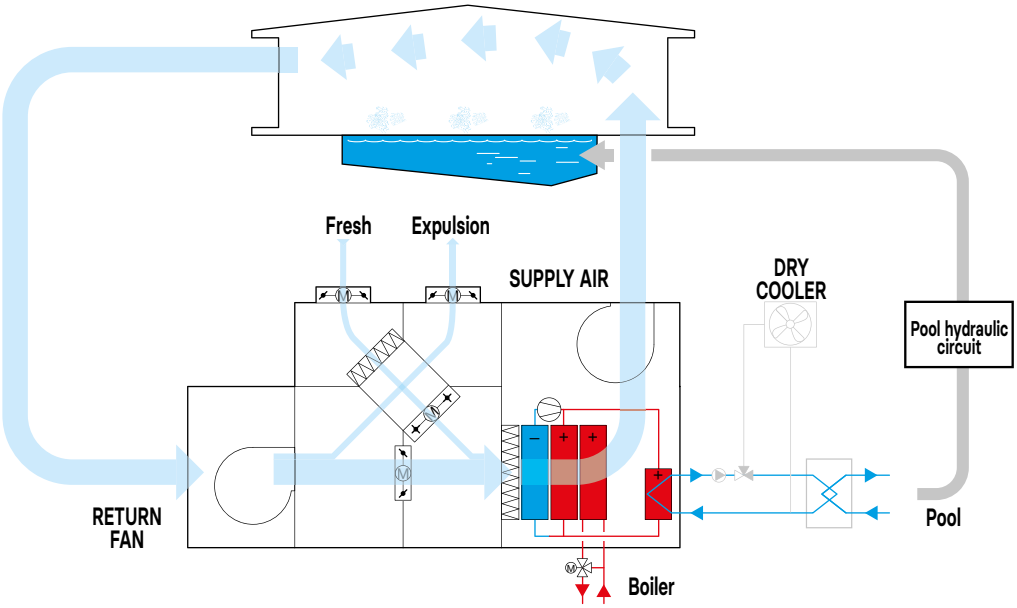

Dry-Pool

DAESY-DRESY-DTESY-DEESY 108-2140

	DAESY-DRESY-DTESY-DEESY MODEL		108	112	115	118	122	128	131	136
❷	Dehumidification capacity	l/h	7,7	11,3	13,1	16,5	19,5	25,2	28,0	33,0
❷	100% heating capacity transferred to air	kW	12,6	18,8	23,0	30,1	33,9	43,7	49,6	57,6
❷	Total absorbed power	kW	3,2	4,9	5,4	7,0	7,4	10,0	11, 3	13,1
	Scroll compressors/steps	no.	1/1	1/1	1/1	1/1	1/1	1/1	1/1	1/1
	Fans/Motors	no.	1/1	1/1	1/1	1/1	1/1	1/1	1/1	1/1
❺	Max available static EC Version	Pa	500	500	500	500	500	500	500	500
	Nominal air flow rate	m³/h	2.200	3.000	3.500	4.500	4.700	6.200	7.200	8.200
	DIMENSIONS		**108**	**112**	**115**	**118**	**122**	**128**	**131**	**136**
	L - Width	mm	790	790	850	850	850	850	850	850
	H - Height	mm	1.380	1.380	1.580	1.580	1.890	1.890	1.890	1.890
	P - Depth	mm	1.300	1.300	1.600	1.600	1.600	1.600	1.600	2.100
	DRESY MODEL		**108**	**112**	**115**	**118**	**122**	**128**	**131**	**136**
❶	Dehumidification capacity	l/h	7,8	11,3	14,5	18,1	21,6	27,4	30,5	36, 2
❶	45% heating capacity transferred to water	kW	6,9	10,1	11, 4	13,8	15, 9	19,6	23,4	27,3
❶	Total absorbed power	kW	2,6	4,1	4,4	5,6	5,8	8,3	9,4	10,5
	DTESY MODEL		**108**	**112**	**115**	**118**	**122**	**128**	**131**	**136**
❸	Dehumidification capacity	l/h	8,5	12,3	14, 5	18,2	21, 3	27, 4	-	-
❸	100% heating capacity transferred to water	kW	14, 7	20,8	24,8	31,9	35,6	45, 4	-	-
❸	Total absorbed power	kW	2,7	4,3	4,5	5,8	6,0	8,5	-	-
	DEESY MODEL		**108**	**112**	**115**	**118**	**122**	**128**	**131**	**136**
❹	Dehumidification capacity	l/h	8,3	11,9	14,2	18,2	21,3	26,6	30,1	35,9
❹	100% heating capacity transferred to water	kW	14,7	19,7	23,7	30,7	35,6	45,4	50,2	58,6
❹	Total absorbed power	kW	2,8	4,5	4,8	5,9	6,4	8,9	10,0	11,3

Features

	DAESY-DRESY-DTESY-DEESY MODEL		237	242	250	254	262	271	281	294	2111	2126	2140
❷	Dehumidification capacity	l/h	34,0	38,3	43,6	49,3	56,0	64,8	72,4	83,4	96,4	110,7	126,0
❷	100% heating capacity transferred to air	kW	59,8	67,8	78,1	88,0	100,5	116,4	121,7	143,2	183,3	204,8	231,7
❷	Total absorbed power	kW	13,8	15,1	18,5	20,1	22,1	27,0	32,1	35,9	44,9	53,7	60,0
	Scroll compressors/steps	no.	2/2	2/2	2/2	2/2	2/2	2/2	2/2	2/2	2/2	2/2	2/2
	Fans/Motors	no.	1/1	1/1	1/1	1/1	1/1	1/1	1/1	3/3	3/3	3/3	3/3
❺	Max available static EC Version	Pa	500	500	500	500	500	500	500	500	500	500	500
	Nominal air flow rate	m³/h	9.000	9.300	11.000	12.400	14.400	16.500	18.000	21.000	22.000	25.000	27.000
	DIMENSIONS		**237**	**242**	**250**	**254**	**262**	**271**	**281**	**294**	**2111**	**2126**	**2140**
	L - Width	mm	850	850	850	1.230	1.230	1.230	1.230	1.230	1.230	1.230	1.230
	H - Height	mm	1.890	1.890	1.890	2.000	2.000	2.000	2.000	2.000	2.000	2.000	2.300
	P - Depth	mm	2.270	2.270	2.270	2.870	2.870	2.870	2.870	3.370	3.870	3.870	3.870
	DRESY MODEL		**237**	**242**	**250**	**254**	**262**	**271**	**281**	**294**	**2111**	**2126**	**2140**
❶	Dehumidification capacity	l/h	37,3	42,0	48,7	53,9	61,2	71,0	80,7	93,7	111,1	127,1	144,6
❶	45% heating capacity transferred to water	kW	27,4	31,8	39,0	41,4	46,8	56,1	61,0	69,7	84,2	96,7	109,6
❶	Total absorbed power	kW	10,8	11,9	14,2	16,0	18,1	21,8	25,2	28,5	34,6	40,9	45,4
	DTESY MODEL		**237**	**242**	**250**	**254**	**262**	**271**	**281**	**294**	**2111**	**2126**	**2140**
❸	Dehumidification capacity	l/h	37,3	41,7	48,3	53,5	-	-	-	-	-	-	-
❸	100% heating capacity transferred to water	kW	61,5	69,5	81,0	89,6	-	-	-	-	-	-	-
❸	Total absorbed power	kW	11,1	12,2	14,6	16,5	-	-	-	-	-	-	-
	DEESY MODEL		**237**	**242**	**250**	**254**	**262**	**271**	**281**	**294**	**2111**	**2126**	**2140**
❹	Dehumidification capacity	l/h	37,3	41,0	48,1	52,4	60,2	70,3	78,8	91,6	109,8	124,8	142,4
❹	100% heating capacity transferred to water	kW	60,8	68,2	79,8	89,6	101,5	118,0	126,3	147,5	184,7	206,8	232,3
❹	Total absorbed power	kW	11,3	12,8	15,3	17,3	19,1	23,1	26,7	30,1	35,8	43,1	48,5

Data at the following conditions:

❶ Transferring heat to the air and the water. Ambient air temperature: 27°C, 65% R.H. In/out pool water temperature: 26/32°C.

❷ Transferring heat only to the air. Ambient temperature: 27°C, 65% R.H.

❸ Transferring heat only to the water. Ambient air temperature: 27°C, 65% R.H. 26/32°C in/out pool water temperature.

❹ Transferring heat only to the water of the Dry-Cooler. Ambient air temperature: 27°C, 65%R.H. 31/37°C in/out water temperature.

❺ Without the BA accessory and/or the DAHR additional module.

Management, control and monitoring systems

Management, control and monitoring systems

Management, control and monitoring systems

SYS-TO
System Touch Manager & Web APP 254
Integrated system management

MTM
Multi Technology Manager 258
Chiller management software

SIR
Rhoss Integrated Sequencer 264
Chiller management software

RHOSS MONITORING: Mobile - Cloud - Real time 266
Remote monitoring

RHOSS WEB SERVER 268
Control and monitoring via ETHERNET

SYS-TO System Touch Manager & Web APP

Integrated system management

System Touch Manager offers a simple and effective interface to control and program the climate of the individual rooms of a building, manage the main system components, the environment terminals and display energy consumption from a single point.

The system offers a series of energy-saving functions for the management of generators, the production of domestic hot water, the distribution network and the terminal units such as the option to program up to 10 summer weekly time bands, system side and DHW side, at 2 temperature levels.

It is also possible to manage via the local network and remote monitoring via the web.

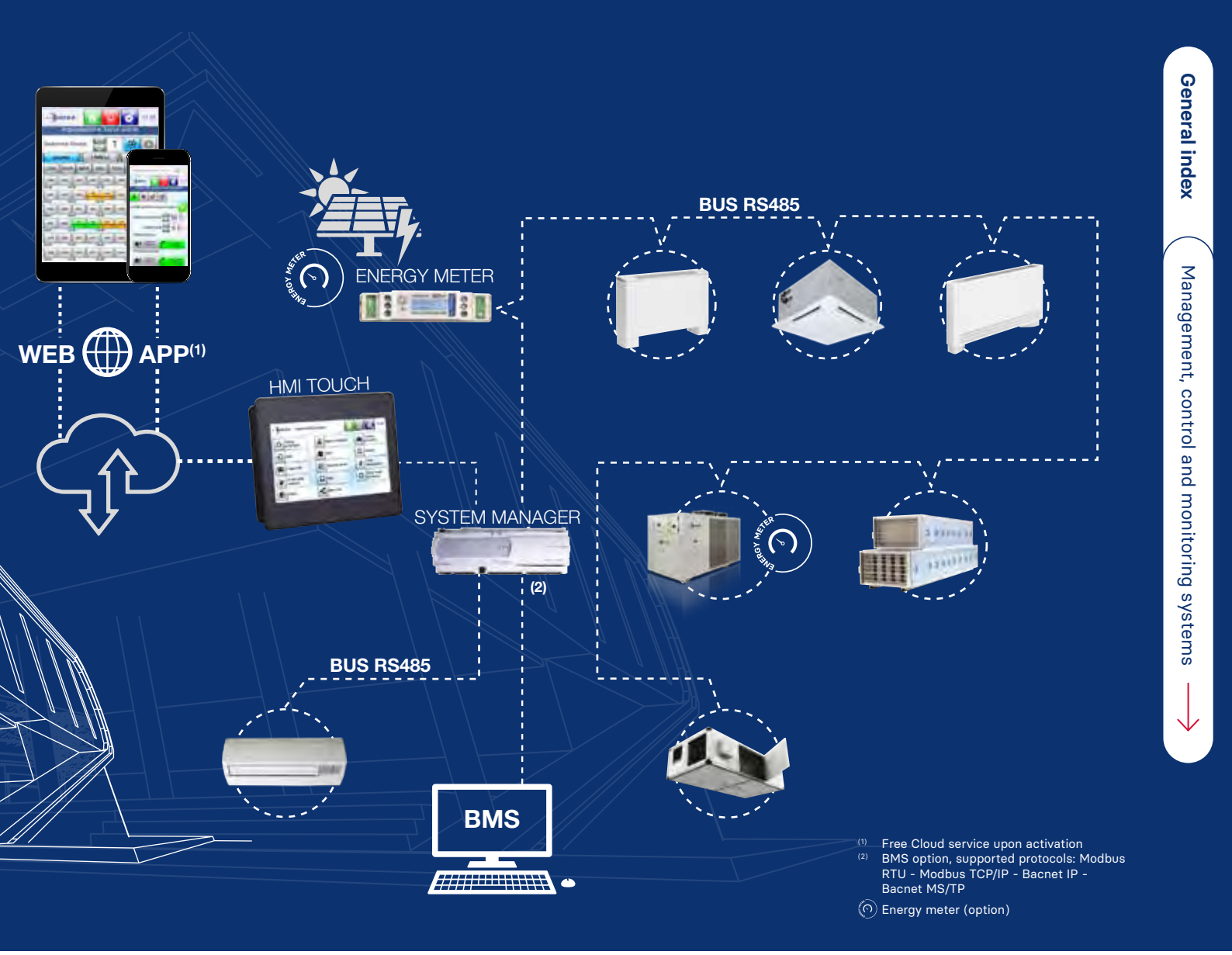

(1) Free Cloud service upon activation
(2) BMS option, supported protocols: Modbus RTU - Modbus TCP/IP - Bacnet IP - Bacnet MS/TP

Energy meter (option)

The solution

SYS-TO is an integrated management system that manages the system's main components via an electronic System Manager regulator.
User interaction with the management program is very easy; it can be managed with a simple and user-friendly display or touch screen interface.
SYS-TO enables centralised management of up to maximum 64 areas made up of fan coils with related temperature control. It is also possible to manage a cooling-chiller unit, a RHOSS multi-purpose heat pump with supplementary boiler- and up to 5 VMC units, heat recovery units or air handling units.

Functions

System manager, available in small or medium version, allows you to:
- check the temperature detected in the various areas
- set the area setpoint and limit its modification
- limit user interaction with the area control
- control the fan coil with time bands (stop or start with two comfort levels)
- adjust the temperature of the water sent to the radiant panels in heating mode, with a mixing valve and climate compensation
- adjust the water temperature in the system side tank with 2 levels, comfort and economy, with climate compensation
- adjust the temperature and manage the time bands for the production of hot water in the DHW tank
- manage the thermal integration by means of solar panels
- manage the DHW side diverter valve
- communicate the set-point to the primary generator
- select the summer/winter operating mode manually, by date, outdoor temperature or digital input
- select the most convenient heat generator between heat pump and boiler
- manage a supplementary heat source - electrical resistance - or auxiliary - boiler, system side or DHW side
- transform electricity, overproduced by the photovoltaic system, into thermal energy stored in system and domestic hot water storage tanks
- manage the DHW recirculation pump and the DHW cycle anti-legionella sanitisation
- manage the area pumps, based on the start status or actual call in the individual areas
- activate the VMC/Primary air units
- send alarm e-mails in real time
- measure and view the electrical consumption of system components locally or online.

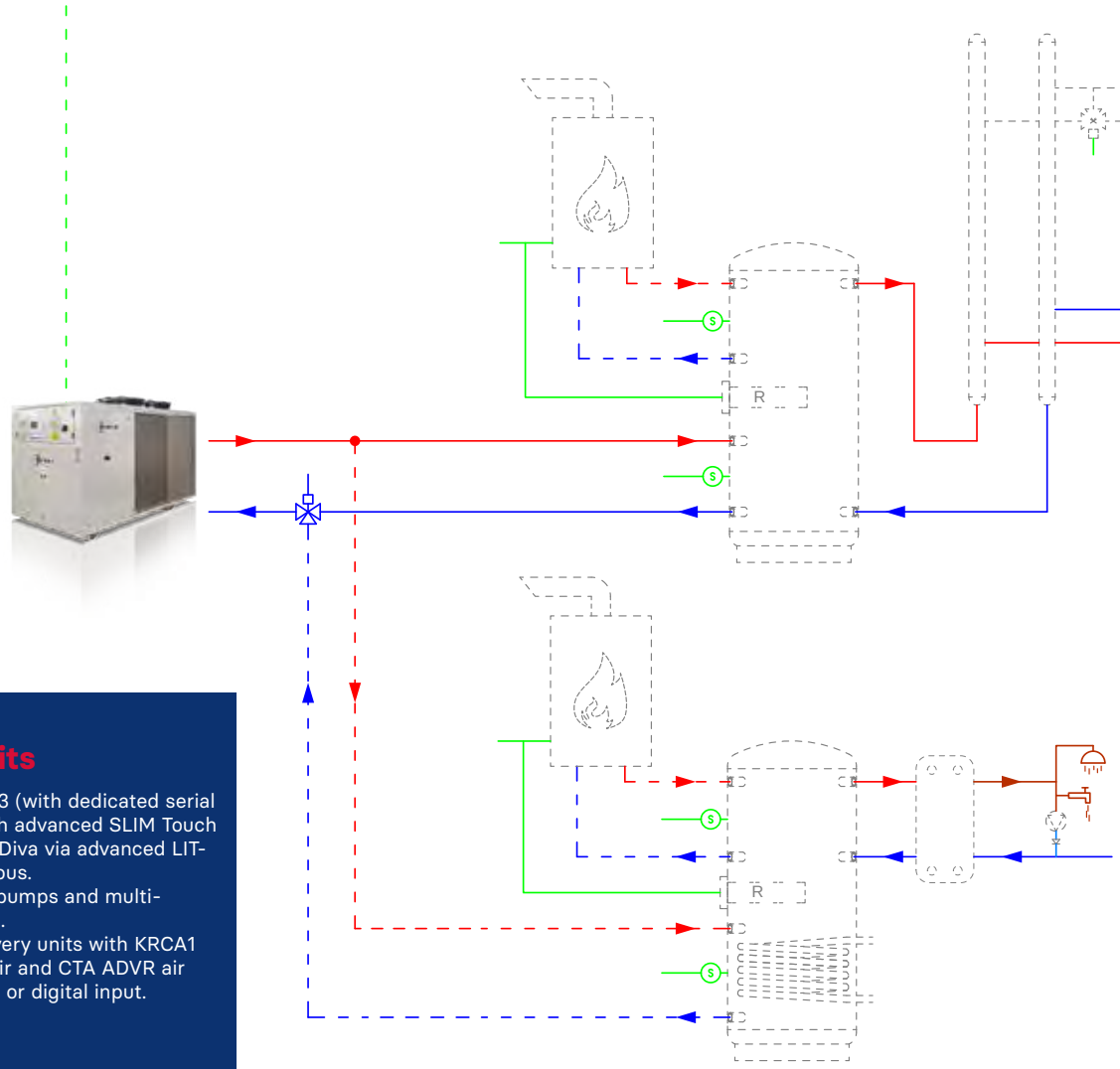

Compatible units

- Fan coils: Idrowall-I/V3 (with dedicated serial cable), Brio-I Slim with advanced SLIM Touch regulation, Yardy and Diva via advanced LIT-Touch regulation, via bus.
- RHOSS chillers, heat pumps and multi-purpose units, via bus.
- VMC units, heat recovery units with KRCA1 regulator, ADV Next Air and CTA ADVR air handling units via bus or digital input.

System management

SYS-TO allows for integrated management of the following components in 2-pipe systems and 2-pipe systems with domestic hot water (DHW) production:

Generators

- Rhoss heat pump/chiller or multi-purpose system
- System side inertial storage tank temperature probes
- Technical tank temperature probes for DHW production
- Supplementary heat source - electrical resistance - or auxiliary - boiler.
- Circulation pump and solar circuit temperature probe
- Diverter valve for DHW
- Outdoor air temperature probe for climatic compensation or seasonal switching

Distribution network

- Area circulation pumps, for primary or primary/secondary circuit, direct or mixed, at low temperature (up to 5)

System terminals

- Control up to 64 fan coils or terminals with on-board regulation in serial connection, possibility of activating other devices in parallel with the fan coil (radiant panels in heating mode or radiators)
- Fresh air enable for VMC, Heat recovery units and Air handling units (up to 5)

SYS-TO in 4-pipe systems allows system terminals and area pumps to be managed.

Other devices managed

Electricity consumption meter.

The electricity meters enable to measure the instantaneous consumption and the daily, weekly and monthly kWh consumed by the monitored units.

SYS-TO devices are class B according to EN-15232.

Serial network with simplified routing

An RS485 ModBus RTU serial interface is required on each connected device for connection via bus. Configuring serial addresses is extremely easy; it does not require additional devices but can be done directly from the control keypad of each fan coil.

Master/slave management

It is possible to connect multiple slave units with the same ambient set-point for each Master fan coil equipped with a control or receiver.

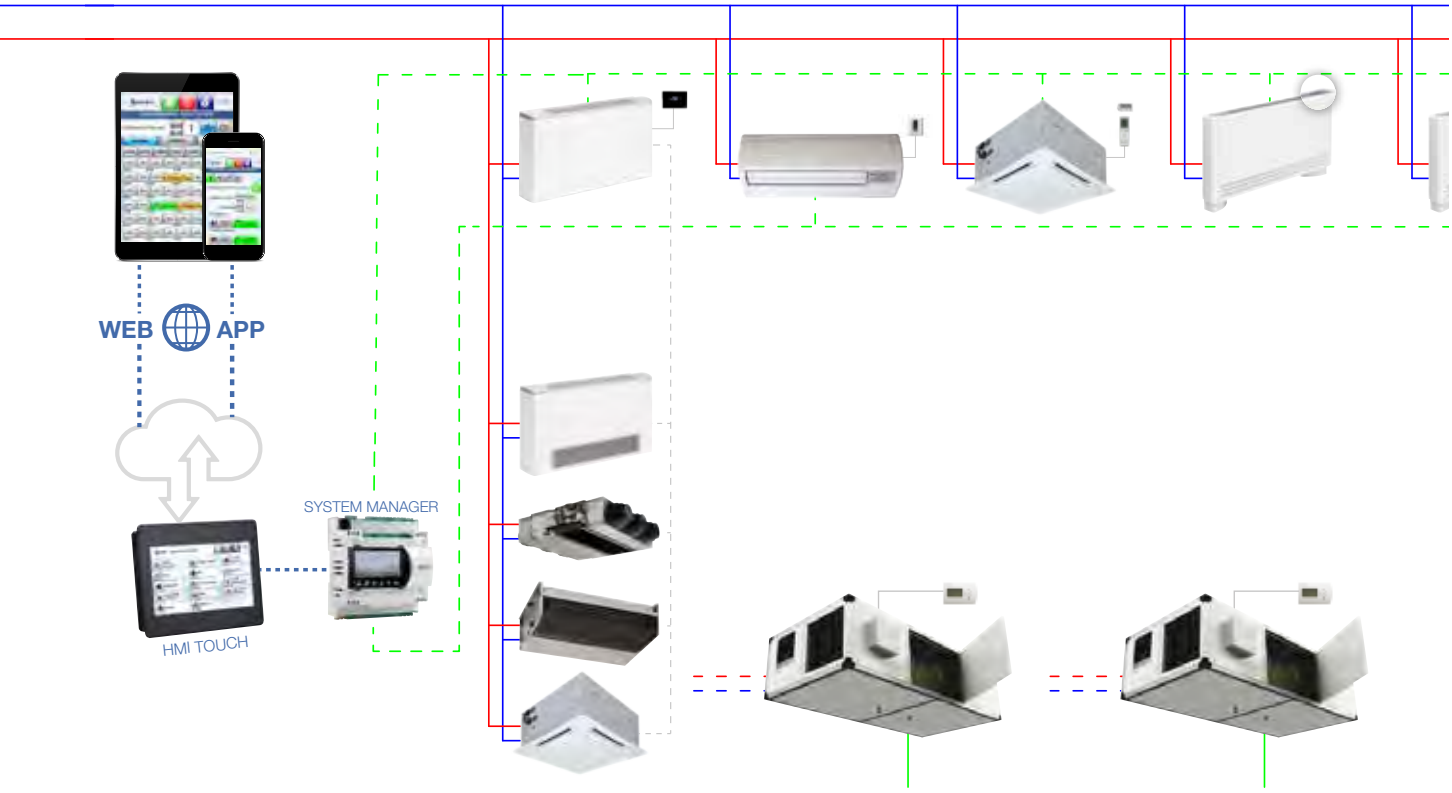

User interfaces and remote control via WEB

SYS-TO consists of a regulator (System Manager) to control room terminals (connected in serial mode) and to manage components in the field (through digital inputs and outputs) and from a user interface (HMI) available in various types.
The simplest interface consists of a semi-graphical LCD integrated in the regulator, to which a remote keypad with a backlit semi-graphical LCD display can be added.
The Touch Colour interface consists of a resistive touch screen with a 7" TFT 16:9 -64 K colour wall-mounted recessed display, it provides a clean and innovative design and a lively and intuitive interface, complete with an Ethernet interface and USB port.
The Touch Panel with integrated web-server is available with the Web APP option for remote control and monitoring through any Web browser with HTML5 support.

Solution with:	Integrated semi-graphical interface	Remotable semi-graphical interface	Touch colour interface	Touch colour interface and Web APP
Web APP				
HMI				
System Manager		o	o	o

MTM Multi Technology Manager

Chiller management software

MTM is the new system, conceived, designed and built by RHOSS, for managing up to a maximum of 10 between multipurpose units, reversible heat pumps and chillers in perfect synergy with a guarantee of safety and reliability in modern systems.

Thanks to dedicated algorithms, MTM can effectively manage cooling and thermal loads in a stable and precise manner.

MTM is a manager and as such optimally decides the start-up sequence of the RHOSS units in the applications that the designer deals with every day.

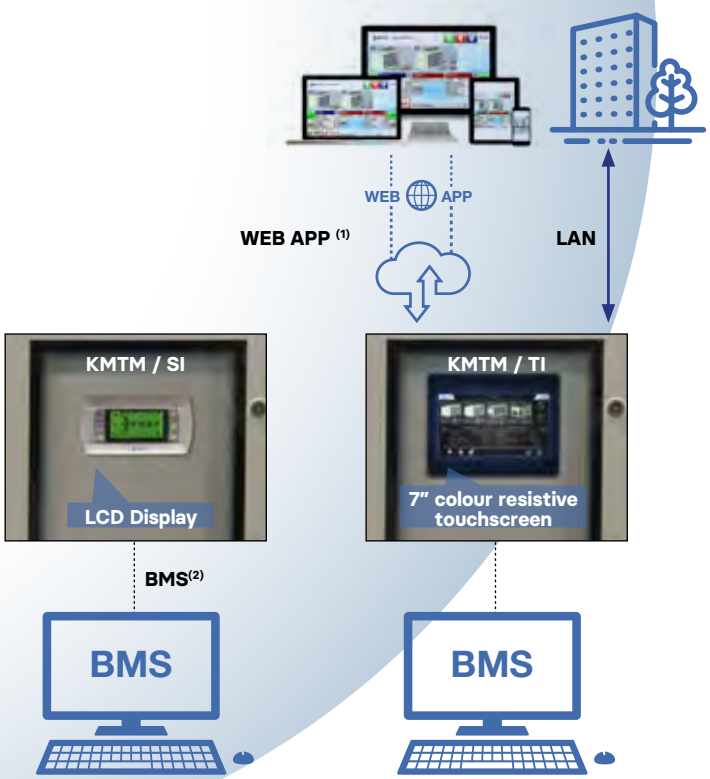

(1) service can be activated (2) via interface, using the MODBUS, BACNET IP, MODBUS TCP/IP protocols

MTM - Types of units managed

Multipurpose units

Reversible heat pumps and HT65 heat pumps

Chillers also with freecooling and inverter technology

Condenserless units

The units can operate at variable flow rate with the innovative VPF by Rhoss.

MTM – THE OFFER

MTM is available in two configurations but with one goal: to efficiently manage the units selected for the system.

MTM/SI – with graphic interface and standard functions such as the display of unit operating parameters, operating status, alarms, etc.

MTM/TI – with Touch graphic interface and advanced functions. Access to the various pages, for consultation and parameter editing, is simplified in the 7" display; it is also possible to view, through graphs, the trends of water/air temperatures and e-mail notification of any alarm can be set

Ideal for using different technologies

Management of RHOSS refrigeration units present in the system by optimising the specific technologies used (chillers, heat pumps and multipurpose units).

In addition to managing homogeneous units, it is possible to combine EXP MULTIPURPOSE units with CHILLERS or HEAT PUMPS and units with different sizes and versions.

Ideal for ensuring system loads

In medium-large systems, MTM meets the required thermal loads in a precise and stable manner throughout the year.

In the case of systems with both 2 pipes + DHW and 4 pipes, where there is the demand for even unbalanced refrigeration and thermal loads, the possibility of managing units with different technology and power, optimises efficiency and the overall offer of the system.

Ideal because easy to connect

MTM is connected to the chiller units, hydraulically connected in parallel to each other, via serial network (*).

The user interacts in a simple way with the manager, via a graphic interface (standard or Touch).

MTM connectivity to BMS systems is guaranteed through accessory serial interfaces, with MODBUS, BacNet MS/TP, BacNet IP, TCP/IP Modbus protocols.

If there is a need to monitor and act on MTM from a remote station using specific web pages, MTM/TI is set up for connection to a company LAN network or to enable access via any Web browser from mobile devices (e.g. smartphone, tablet).

(*) the RS485 serial board is required in some units. See the price list for more information

Ideal because easy to configure

The value of a manager like MTM is also measured by the simplicity of the installation. Thanks to the WIZARD procedure introduced and the Self-learning function of the connected units, the user is guided through the first device configuration to be immediately ready and operational.

Ideal for any installation

MTM is designed, in the standard configuration, to automatically start-up the hydronic units. Once the individual units present are recognised, it decides which strategy to use to maximise efficiency, for example preferring freecooling units if the outdoor temperature is favourable, inverter technology for the best power modulation or simultaneous operation (cooling+heating) of the multipurpose units. It is also possible to "customise" unit management, according to the customer's preferences or type of system, even with the Backup function in the most sensitive installations. The Booster function, which can be set if there is a Backup unit, can meet the various peak loads that may occur throughout the year.

Ideal for service

MTM simplifies SERVICE operation as the implemented algorithms enable optimal operation of the group of units even in case of partial dysfunctions.

MTM provides the history of the alarms and, in case of MTM/TI version, also the notification function by mail/message to designated users.

Ideal for having the situation under control

MTM is accessible:

Directly from the device (KMTM/SI and KMTM/TI) through the present graphic interface.

From a BMS connected to the device (KMTM/SI and KMTM/TI) through serial interfaces Through the dedicated Web pages (KMTM/TI only).

In this case, the pages can be accessed via LAN connection or WEB APP

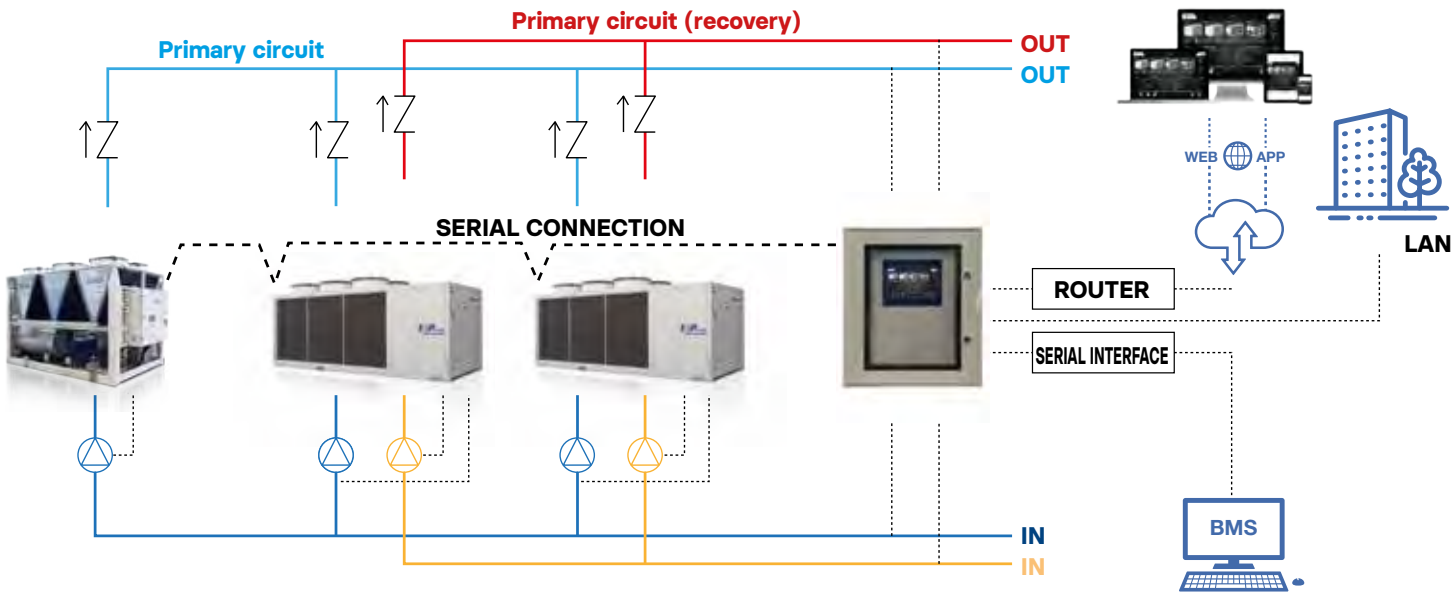

Simplified example of a 4-pipe system with one chiller and two EXP multipurpose units managed by KMTM/TI. The system provides for the units to operate throughout the year, with the production of cold and hot water at the same time or independently.

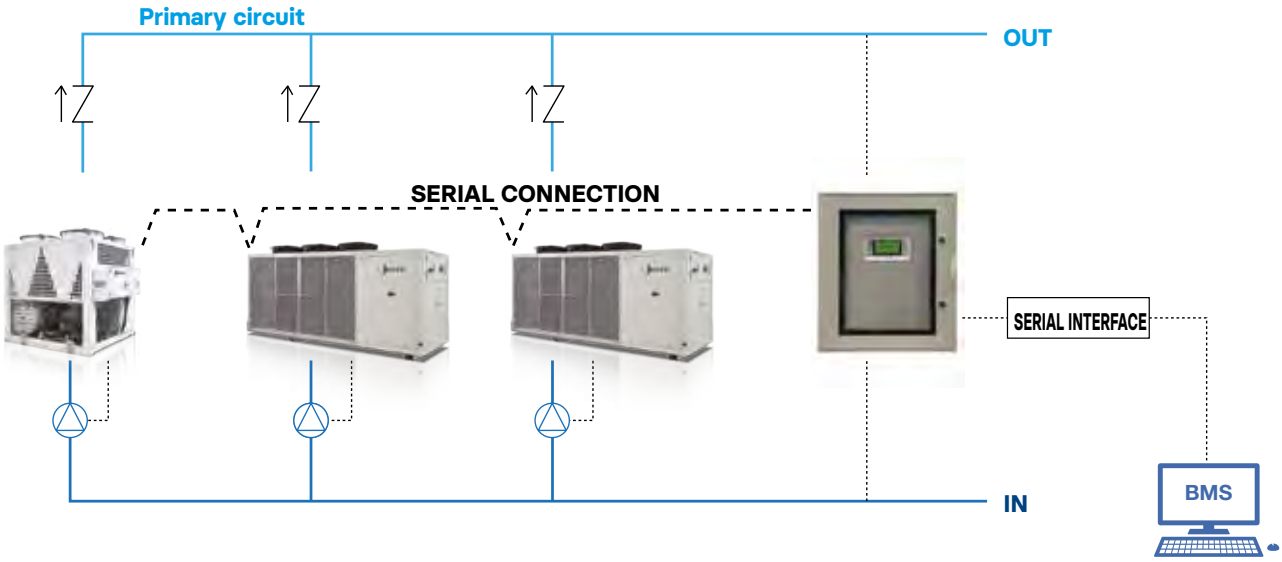

Simplified example of a 2-pipe system with two heat pumps and one chiller managed by KMTM/SI. The system provides for summer operation with the two heat pumps and the chiller operating in SUMMER mode and winter operation with the inversion of the heat pumps and the shutdown of the chiller.

MTM - Multi Technology Manager

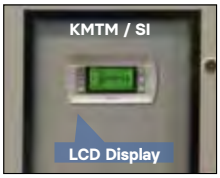

TYPE AND UNIT MANAGEMENT	KMTM/SI	KMTM/TI
Maximum number of units	10	10
Management of CHILLERS, HEAT PUMPS, EXP UNITS, FREECOOLING UNITS, CONDENSERLESS UNITS	•	•
Advanced management of STANDARD+FREECOOLING CHILLERS	•	•
Advanced management of EXP MULTIPURPOSE UNITS+CHILLERS in 4-pipe systems	•	•
Advanced management of EXP MULTIPURPOSE UNITS+HEAT PUMPS (connected to main circuit) in 2-pipe+DHW systems	•	•
Advanced management of Multiporpose EXP units+ HEAT PUMPS (connected to the main circuit/recovery with hydraulic changeover) in 4 pipes systems	•	•
Advanced management of external pumping unit(s), primary side. Possibility of managing single pump for single unit or single pump for group of units.	•	•
CONTROL LOGIC		
STANDARD, based on the type of units connected, used technology, hours worked	•	•
ADVANCED, based on customisable SATURATION or EQUALISATION logics	•	•
Choice of the type of balancing of the hours worked	•	•
BACKUP unit management	•	•
Advanced management of units with VPF by RHOSS (primary side variable flow rate)	•	•
REGULATION		
Control on leaving or return water temperature	•	•
Adjustment with climatic compensation	•	•
Advanced double set point, shifting set point	•	•
Advanced function of forced limitation of the absorbed power	•	•
ACCESSIBILITY TO THE MTM DEVICE		
Multilingual user interface	•	•
Standard graphic interface	•	
Touch screen graphic interface		•
Access from BMS system (including optional serial interface with specific protocols)	•	•
Access from dedicated web pages (MTM in LAN connection with the building where the units are installed)		•
Access from dedicated web pages via WEB APP (Enabling is optional)		•
UNIT MONITORING		
Status display, setting and reading of the most important unit parameters	•	•
Reading of active alarms of the single units and alarms log display	•	•
Alarm notification by e-mail		•
Graphs of the main variables (e.g. water/air temperature trend of the units)		•
Sending PDF of periodic report (e.g. trend of temperature water/air of each unit)		•

RHOSS
RHOSS

SIR Rhoss Integrated Sequencer

Chiller management software

MASTER/SLAVE control up to 4 Rhoss hydronic units

Summer/winter mode for heat pump units

System set-point management

Control of all operating parameters

• The SIR integrated Sequencer makes it possible to manage up to 4 parallel plumbing chillers in medium/large HVAC systems.

• The optimisation of operating times and the insertion of the individual units is controlled by logics integrated in their management software, guaranteeing reliability over time.

• The software at the heart of the system was designed and tested by the Rhoss R&D structure and is able to acquire and manage the main variables of the connected water chillers.

• Depending on the product range, the units of the group can interface with the main BMS on the market, for them to be monitored, to guarantee full control of each type of system (verify the option in the product documentation).

SIR - Types of units managed

- Chillers also with inverter technology
- Reversible heat pumps and HT65 heat pumps
- Polyvalent units
- Condenserless Units

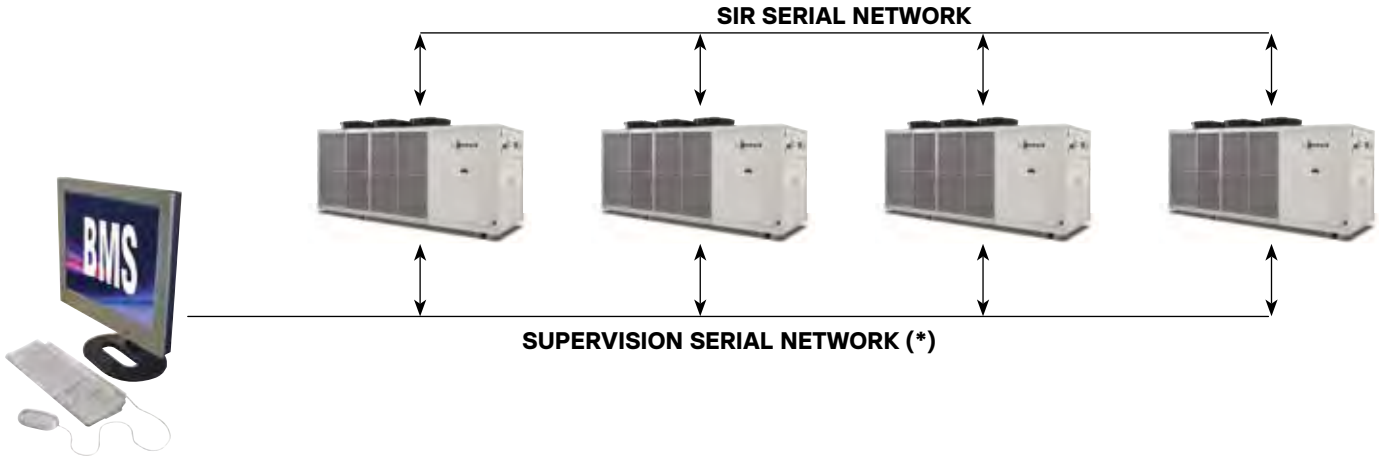

* Consult the price list to check the ranges where supervision is available.

RHOSS MONITORING: Mobile - Cloud - Real time

Remote monitoring

- Remote control of cooling units and air handling units
- 3 different solutions for remote monitoring
- Connection via mobile phone or smartphone
- Web interface with Cloud service
- Status display in real time
- Data logger function
- Alarm and malfunctioning alerts
- Installation of the DIN bar on the device inside the unit's electrical panel.

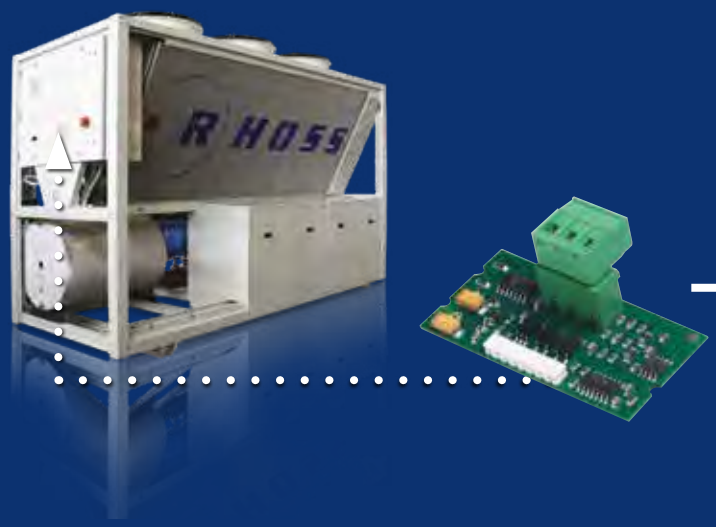

RHOSS COOLING UNIT + SERIAL INTERFACE

MONITORING	MAIN FEATURES	CONTROL DEVICE	INTERNET CLOUD SERVICE	SIM CARD
MOBILE for residential and small-size service sector applications	Input/output management via mobile phone and editing by SMS. Alarm and malfunctioning alerts. Reading up to 8 values.	KMMC - Remote Mobile/ Cloud control device with slot for SIM CARD	Not provided (only SMS management available)	Responsibility of the user or by subscription (not required if local Internet connection is used)
CLOUD for residential and service sector	Management of the main parameters and editing via internet interface or via APPS IOS and ANDROID. Alarm, malfunctioning display with hourly frequency and trend logs. Reading up to 8 values.		Internet Cloud service by subscription (minimum length 1 year) Obligatory	
REAL TIME for the service and industrial sector	Management of the parameters and editing via internet interface or via APPS IOS and ANDROID. Real time alarm, malfunctioning display and trend logs. Reading up to 100 values.	KMRT - Real Time control device with slot for SIM CARD		

CONTROL DEVICE + SIM card

MOBILE

MANAGEMENT VIA SMS

CLOUD **REAL TIME**

MANAGEMENT WITH INTERNET CLOUD SERVICE VIA WEB BROWSER OR WITH iOS AND ANDROID APPS

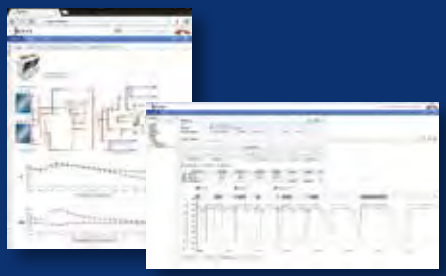

CONTROL DEVICE	Serial interface on Rhoss unit	Remotely manageable inputs/outputs	Monitorable Rhoss units		Readings
KMMC - Remote control device for Rhoss Monitoring Mobile or Cloud, installation on DIN bar (4 modules) within the unit's electric panel, slot for SIM CARD, status and inputs/outputs signalling LED, antenna with 3m cable, protection degree IP40, GSM dual band module 900-1800 MHz, Buffer battery (1 hour approximately); serial ports; Power supply not included.	RS485 Serial interface (accessory KRS485 or SS)	• 2 relay outputs configurable and activated via SMS • 2 digital inputs for external alarms • 1 configurable analogue input (0-10 V, 0-20 mA, 4-20 mA)	**1**	• cooling unit • air handling units	up to 8 readings
KMRT- Remote control device Rhoss Monitoring Real Time, installation on DIN bar (6 modules) within the unit's electric panel, slot for SIM CARD, 3 status signalling LEDs, antenna with 3m cable, protection degree IP40, GSM/GPRS Modem, serial ports; Watchdog hardware, Real Time Clock; Power supply not included. NOTE: the KMRT device is fitted with additional Ethernet interface for using local Internet connection (without SIM CARD).	• RS485 serial interface (accessory KRS485 or SS) • Ethernet Interface (accessory KBE) [only if Ethernet is available on site]	Not available	**5**	• cooling unit • air handling unit	up to a total of 100 readings

RHOSS WEB SERVER

Control and monitoring via ETHERNET

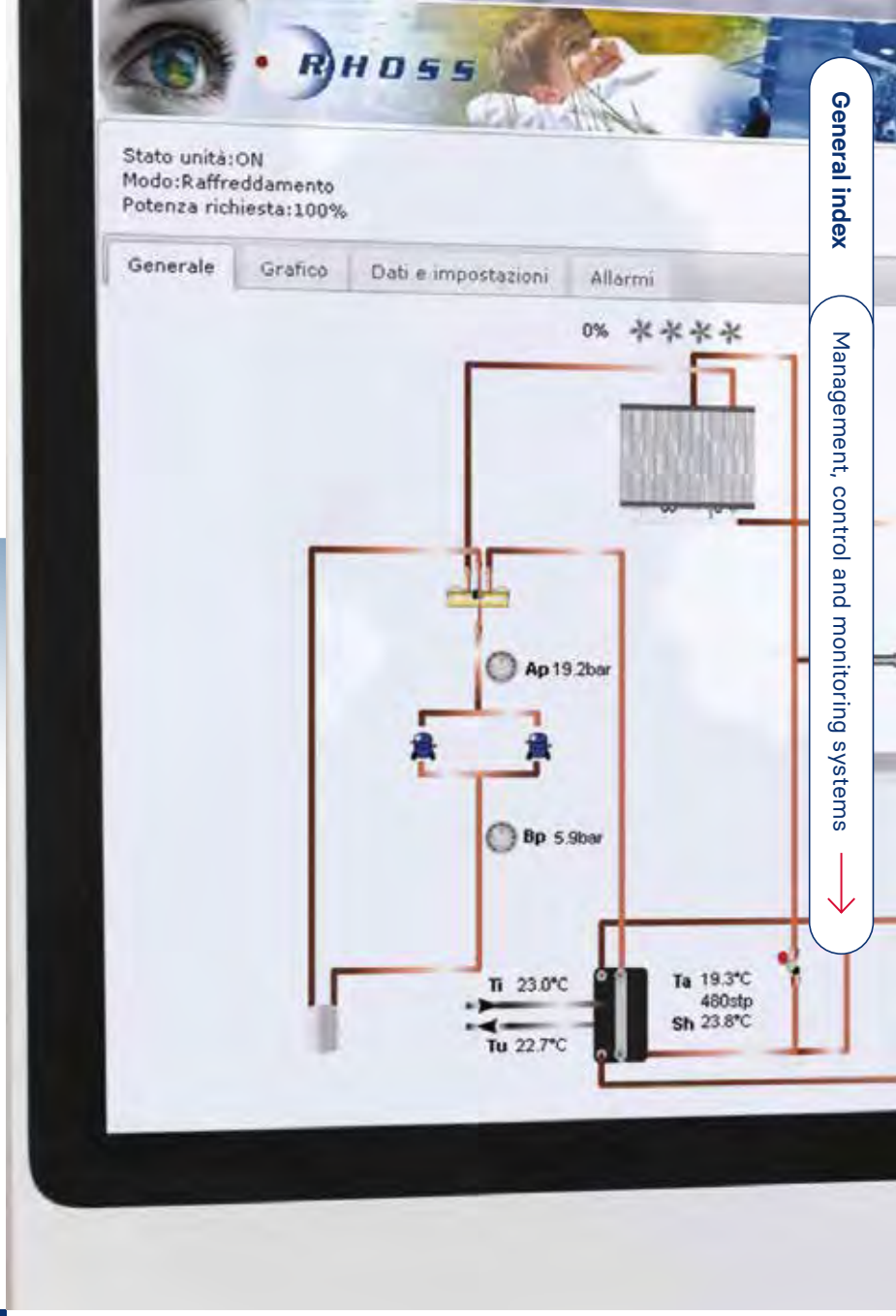

General index
Management, control and monitoring systems

- Managing a single cooling unit via ETHERNET
- Web page with unit status and detailed tabs with:
  - synoptic of the main components
  - graphic trend of the main variables
  - possibility of modifying the main parameters (on/off, mode, set-point)
  - status and alarms reset
- Installation of the ethernet interface inside the unit's electrical panel

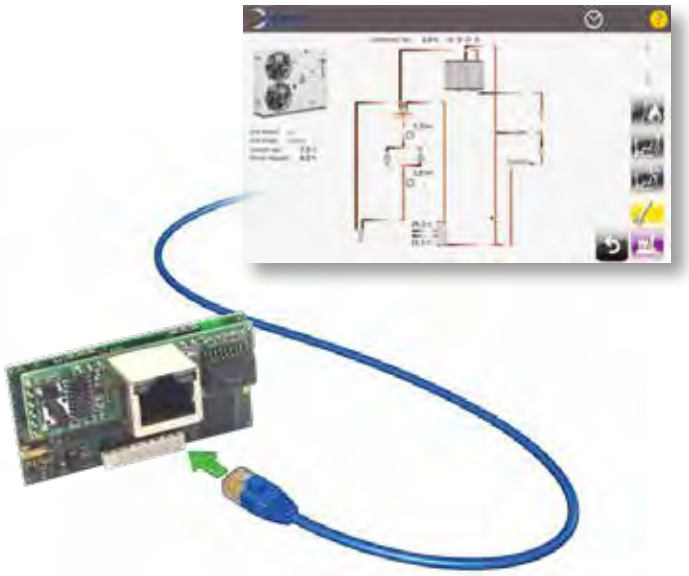

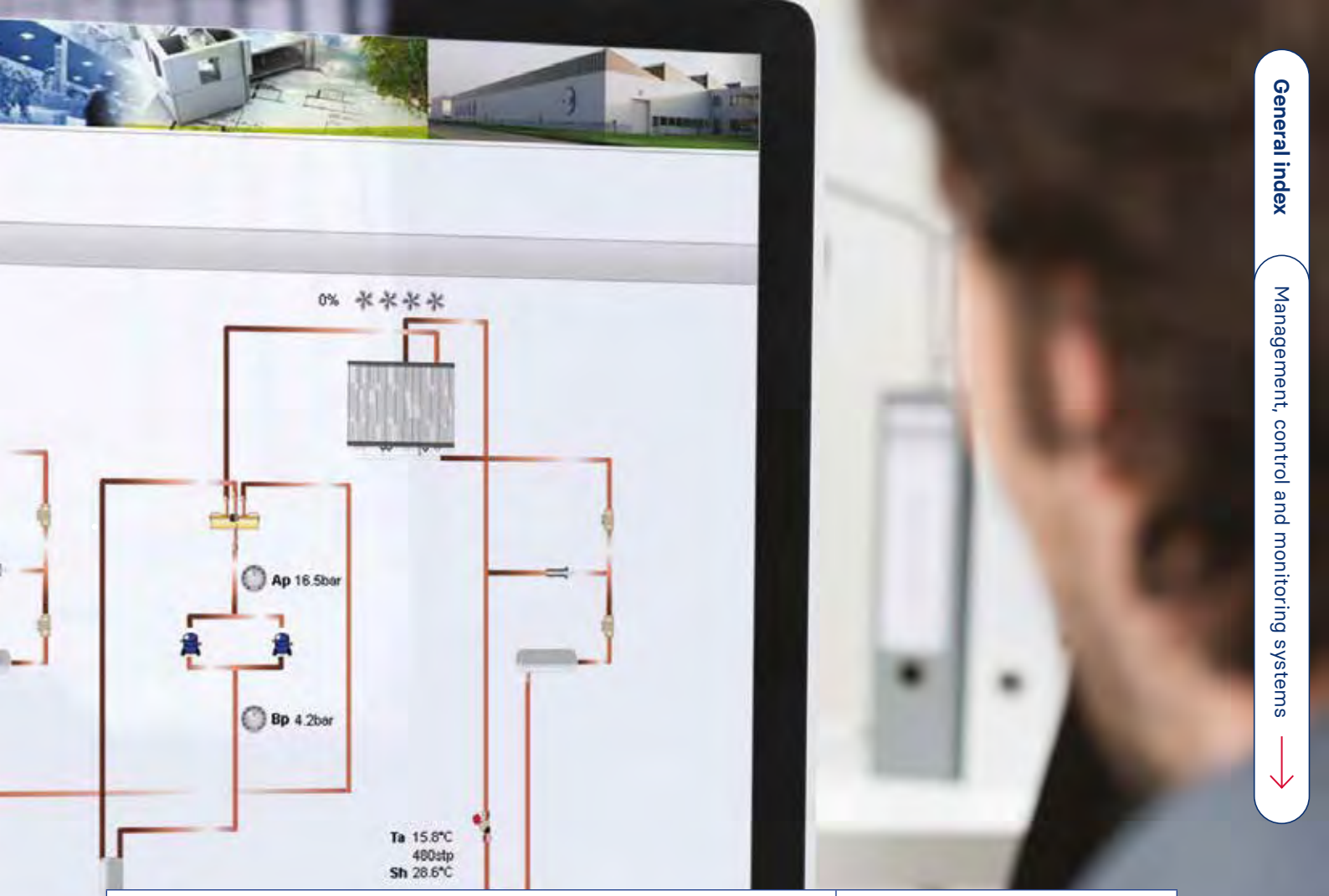

WEB SERVER MAIN FEATURES	MAIN COMPONENTS
Web page with unit status and detailed tabs displaying: **- synoptic diagram of the main components** **- main variable trend graph** **- option to edit main parameters (on/off, mode, set)** **- alarm status and reset**	KWEBU1: Web Server board for Ethernet with user graphic interface

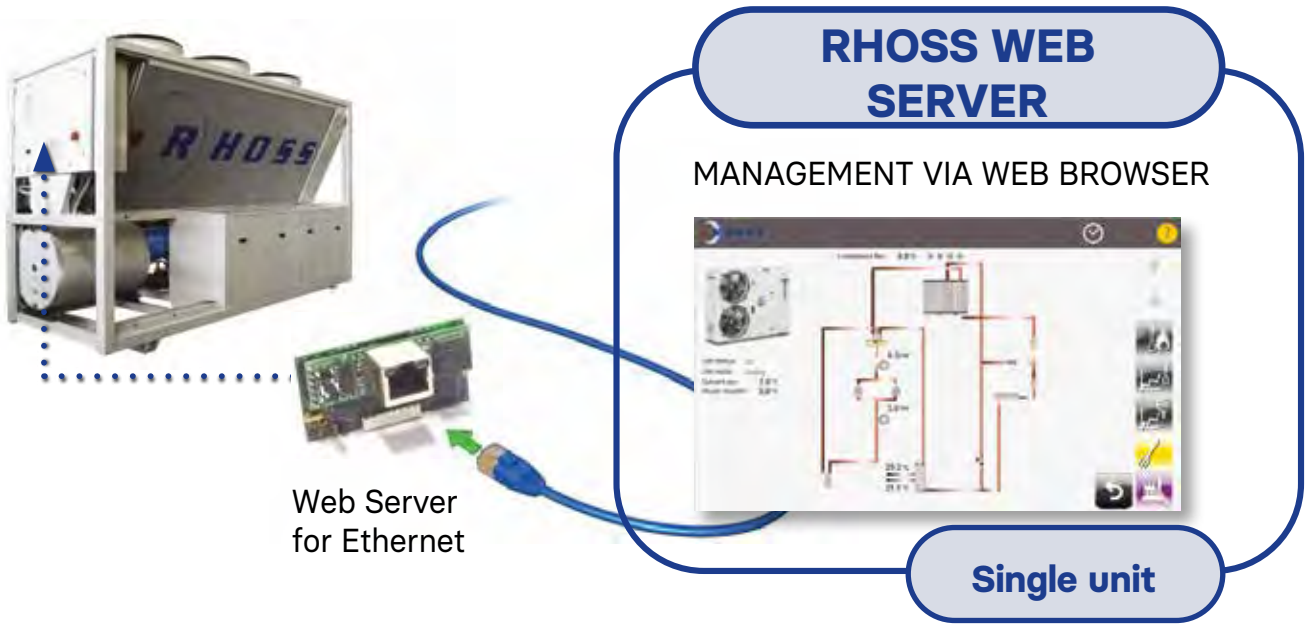

Tools

Tools

Product selection software

UP TO DATE 272
Rhoss solutions at your fingertips

DRY-POOL 276
Selection software

CTA Custom ADV and Next Air 278
Selection software

UP·TO·DATE

Rhoss solutions at your fingertips

UpToDate is the ideal tool for selecting the Rhoss product range and verifying the technical data of each model. The integrated calculation engine verifies the feasibility of the proposed solution, the selection and technical dimensioning of the catalogue models.
A unique and fast way to always find the ideal solution for any application together with the high technology proposed by Rhoss products.

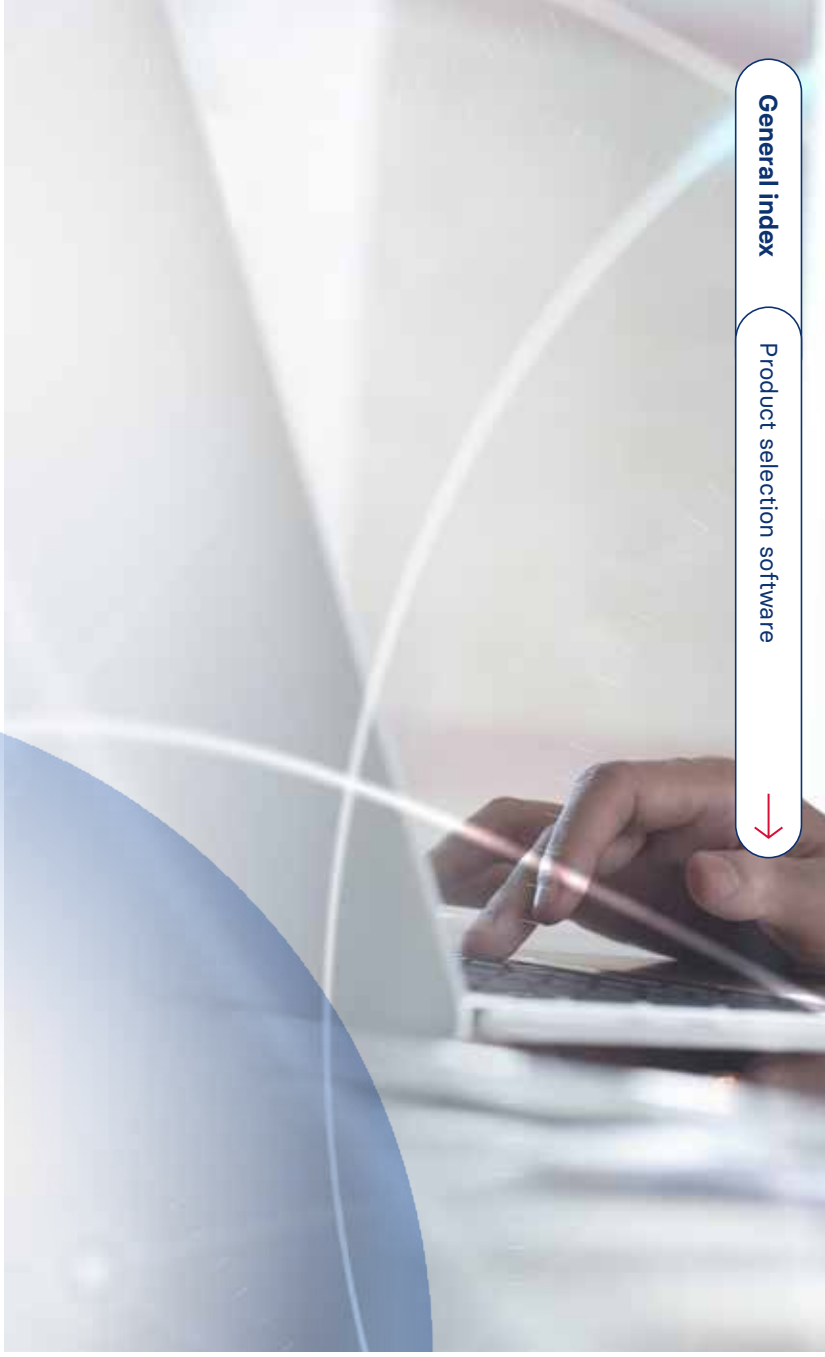

CHILLER selection

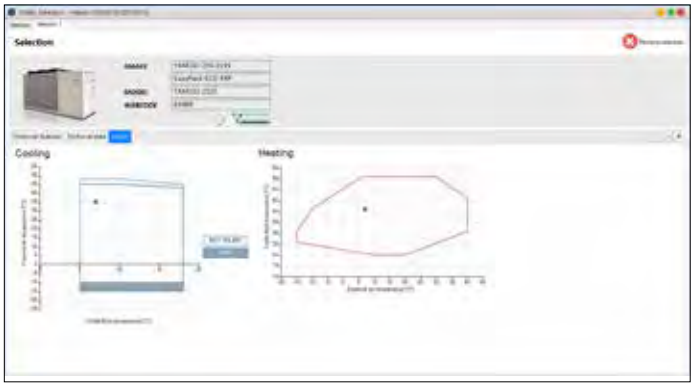

UP·TO·DATE
CHILLER SELECTION

RHOSS

User **Date** 25/03/2022
Reference:

SELECTION

Family	EasyPack ECO EXP
	TXAEQU 270-2135
Model	TXAEQU 2125
Webcode	EAX05

The images are for reference purposes only and may not represent exactly the models or the equipment subject of this document.
The certified standard performances and the certified software tool version can be verified in www.eurovent-certification.com

CONSTRUCTION FEATURES

Multi-purpose ecological air-cooled system with axial fans. Range with hermetic Scroll compressors and refrigerant R454B.
Q - Super-silenced version with soundproofed compressors and low fan speed

POWER SUPPLY: 400V/3PH+N/50HZ
TYPE OF COIL: BRA-COPPER/ALLUMINIUM COIL
CONDENSING CONTROL: FI-CONDENSING CONTROL
ELECTRONIC EXPANSION VALVE: EEV-ELECTRONIC EXPANSION VALVE
EFFICIENCY OPTIMIZER: EEO - EER OPTIMIZER
EVAPORATOR ANTIFREEZE HEATER: RA-EVAPORATOR ELECTRIC. HEATER
EXCHANGER: PA-PLATE EXCHANGER
SOUNDPROOFING: INS-INSULATED COMPRESSOR CASE
PRESSURE VISUALISATION DISPLAY: SPS-HIGH-LOW PRESSURE DISPLAY
PUMPING GROUP MANAGEMENT: VPF_R

o Load-bearing structure and panelling in galvanised and RAL 9018 painted sheet steel; base in galvanised steel sheet.
o The structure consists of two sections:
• technical compartment that houses the compressors, the electrical panel and the main components of the cooling circuit;
• aeraulic circuit dedicated to housing the heat exchanger coils and electric fans.
o Hermetic scroll type rotary compressors. They include thermal protection and casing heater activated automatically when the unit stops (as long as still electrically powered).
o Main and secondary water side braze-welded plate heat exchanger made of insulated stainless steel, complete with antifreeze heater.
o Air side heat exchanger consisting of a coil with mechanically expanded copper pipes in aluminium fins with a corrugated geometry to increase the heat exchanging efficiency.
o Electric helical fans with external rotor, fitted with internal thermal protection and complete with double-row protection mesh.
o Electronic device for pressure regulation and continuous regulation of the rotation speed of the fans:
• in T-High efficiency versions and Q-Super-silenced versions, sizes 270÷295, the FIEC electronic device is supplied as standard - Fans with EC motors;
• in T-High efficiency versions and Q-Super-silenced versions, sizes 2110÷2135, the FI electronic device is supplied as standard - Fans with phase cutting.
o Victaulic-type hydraulic connections.
o Differential pressure switch that protect the unit from any water flow interruptions.
o Cooling circuit made with annealed copper pipe (EN 12735-1-2) complete with:
• filter dryer, charging connections, safety pressure switch on the high pressure side with manual reset, BP and AP pressure transducer, safety valves on the high and low pressure side, tap upstream of the filter, liquid indicator, line insulation suction, electronic expansion valve, cycle inversion valve, liquid receiver, check valves, compressor separator gas separator and compressor suction tap.
o Unit with IP24 protection rating.
o Displayed high and low pressure of the cooling circuits
o Control with Adaptive Function Plus primary circuit regulation.
o The unit is complete with a charge of R454B refrigerant.

ELECTRICAL PANEL
o Electrical panel (IP54) can be accessed by opening the front panel, in compliance with EN 60204-1/IEC 60204-1 Standards in force, fitted with opening and closing via specific tool.
o Complete with:
• electrical wiring arranged for power supply 400-3ph+N-50Hz;
• numbered electric cables;

Family: EasyPack ECO EXP - Model: TXAEQU 2125 **Software Release: 20220318/20220318**
Rhoss Spa - Via Oltreferrovia, 33033 Codroipo (UD) - ITALY
Tel.+39 0432 911611 - Fax +39 0432 911600 - email: rhoss@rhoss.com - web: http://www.rhoss.com
1/6

- **Comprehensive instruments for choosing Rhoss products suitable for your needs.**
- **Fast search for Rhoss products.**
- **Always updated with the latest news.**
- **Detailed technical reports in 7 languages.**

Fan-coil and hydronic terminal selection

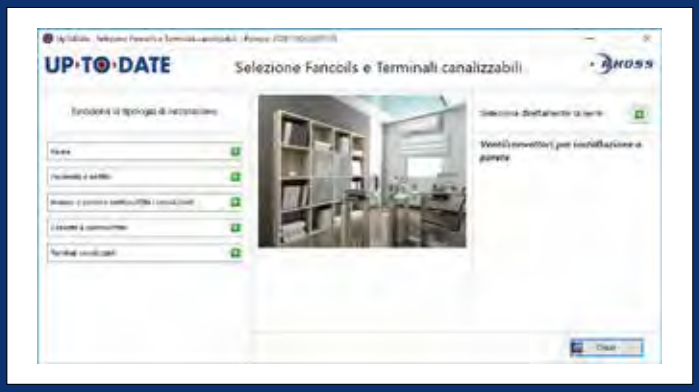

UTNR selection

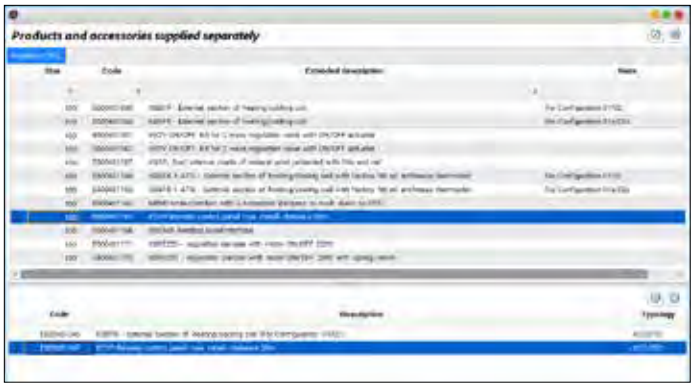

UTNA Platinum selection

Selection of the final configuration

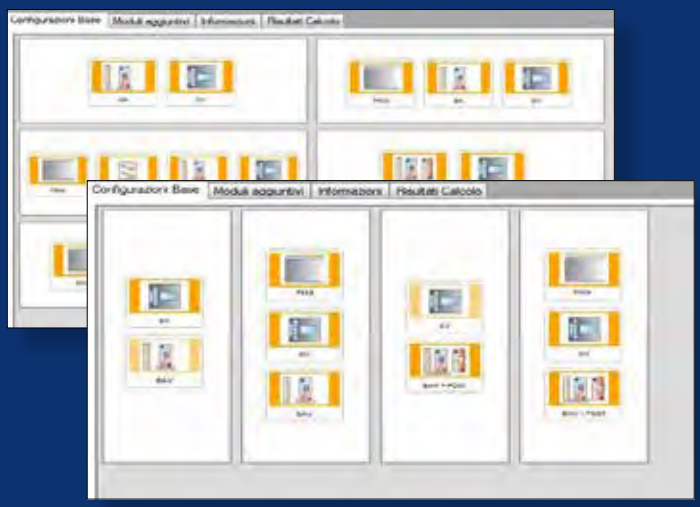

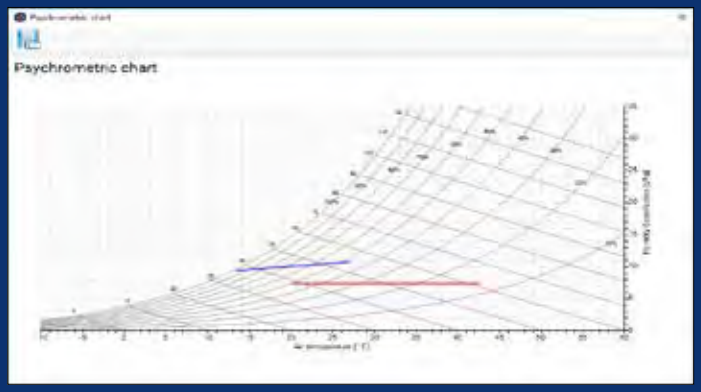

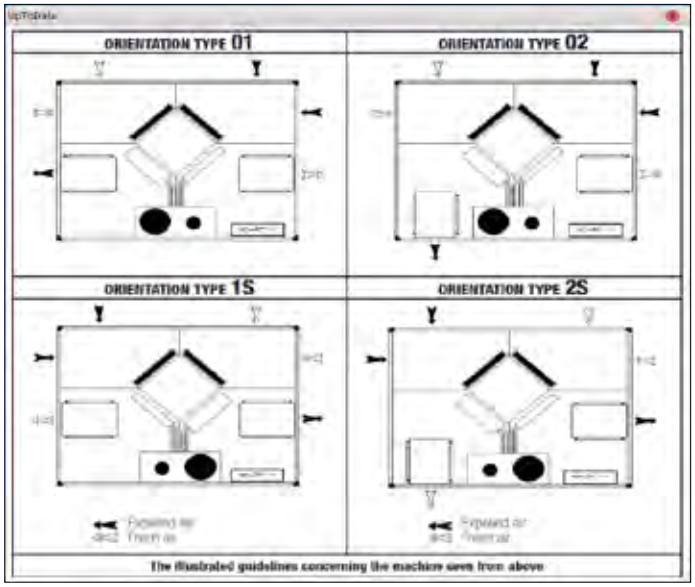

Timely performance of the fans

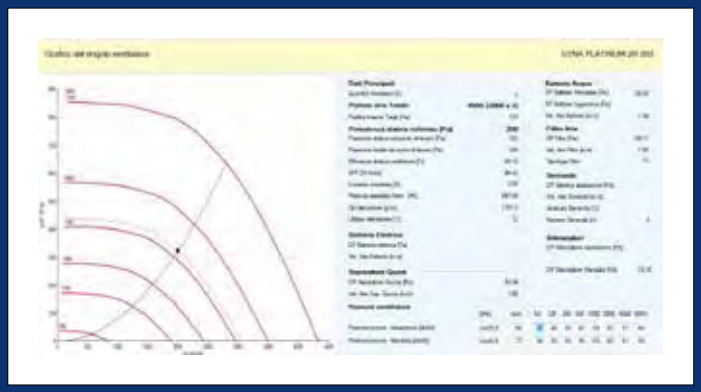

UP·TO·DATE RHOSS

UTNx Selection software

User: Date: 24/03/2022 11:42:52

Reference:

SELECTION DATA

WebCode:	UTAP1
Range:	UTNA PLATINUM
Version:	4R
Model:	120

INVERTER ErP READY 2018

Declared conditions of use

UTNA units are modular air treatment terminal units for horizontal or vertical installations for domestic environments.
The machine is designed for indoor installation.
The machines meet the EU directive requirements with regard to energy saving for NRVU Erp 2018.
The units are available in two versions:
• Horizontal version for ceiling or false ceiling installations with upper support and inspection from below;
• Vertical version for floor installations and front inspection
The units are ductable types, therefore, ducts of an adequate length must always be provided upstream and downstream of the said unit.

Construction features

- Load-bearing sandwich type of double-wall panelling structure with internal galvanised steel sheet panels and external pre-painted steel sheet, with a thickness of 30 mm with interposed acoustic insulation in injected closed cell polyurethane foam with a density of 45 kg/m³. Routine maintenance of the machine is provided from the bottom (for horizontal versions with false ceiling or suspended ceiling installations) or from the front (for vertical versions) by means of removable panels

Working scheme

The images are for reference purposes only and may not represent exactly the models or the equipment subject of this document.
To determine cab water inputs and outputs side, please refer to the technical sheet.

Calculate Noise

f [Hz]:	Tot		63	125	250	500	1000	2000	4000	8000
Sound power - Intake Lw(A),5 [db(A)]:	51		39	46	48	41	28	24	25	35
Sound power - Flow Lw(A),6 [db(A)]:	59		40	53	55	50	42	37	37	47
Sound power - Radiated [db(A)]:	65		51	51	56	58	60	59	44	38

List of selected modules
- PMA - Intake plenum
- SIL - Plenum silencer at intake
- BA coil module (horizontal) / BAV coil module
- Fan module SV
- SIL - Plenum silencer at outlet

NEW

DRY-POOL

Selection software

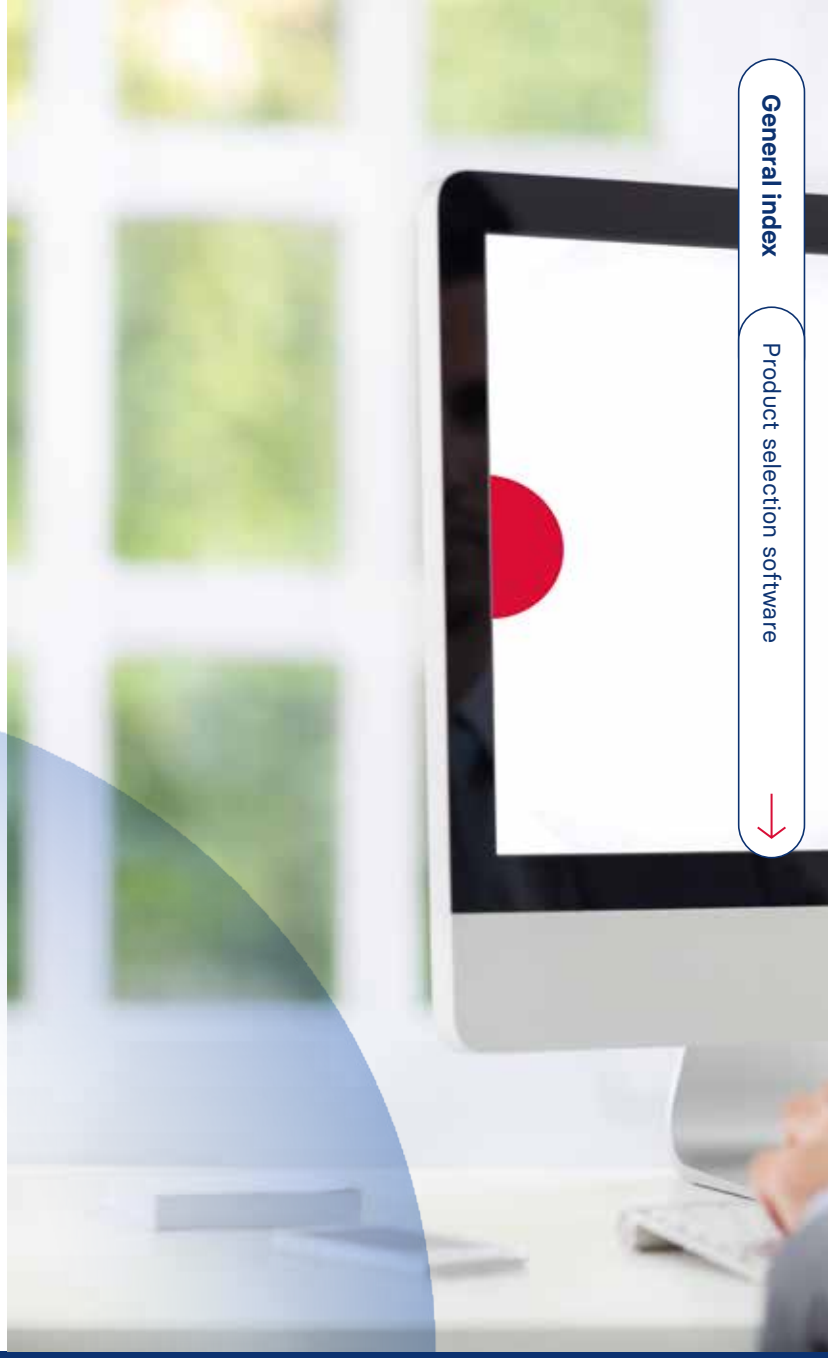

General index
Product selection software

The complete pool dehumidifiers offer

- Commercial selection tool that provides the option to configure the DRY-POOL versions (DAESY, DRESY, DTESY, DEESY) complete with all options and accessories available in the wide equipment range, including the freecooling and cross flow recovery modules.
- Clear interface, complete with all the information required to choose the unit most suited to specific needs and accompanied by a functional diagram of the selected unit to be sure of which DRY-POOL is being selected from the very start.
- Detailed report containing the selected DRY-POOL configuration, the description of the construction and electrical panel features, the nominal performance of the unit, the overall dimensions, the noise data, the operating limits and the dimensional drawings.

UP·TO·DATE

RHOSS

DRYPOOL selector

User		**Date**	24/03/2022
Reference	Hotel		
Machine name	DryPool 1		

SELECTION

Range	Dry-Pool
Air and/or water cooled EC fan POOL DEHUMIDIFIERS. Range with scroll hermetic compressors and R410A refrigerant gas.	
Version	DRESY
DRESY: dehumidifier with 45% pool water side recovery unit	
Additional module	DAHR-DRESY
DAHR-DRESY: Heat recovery module	
Selected machine	DAHR-DRESY 118
Web Code	DP001 - DPM01

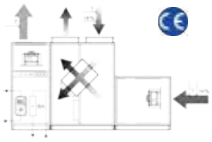

DRYPOOL CONFIGURATION

Heat exchanger	PA-PLATE EXCHANGER
Temperature priority	AIR PRIORITY
Power supply	400V/3PH+N/50HZ
Ventilation	BRUSHLESS
Outlet	VERTICAL
Coils type	BRA-COPPER/ALLUMINIUM COIL
Installation	OUTDOOR
Additional coil	BRA-COPPER/ALLUMINIUM COIL
Filter	STANDARD
Coil compartment	TECH NICAL ROOM FOR EXT COIL
Auxiliary inputs	NOTHING

Supplied loose accessories DRYPOOL

Code	Amount	Description
E968575292	1	Primo Avviamento (OBBLIGATORIO)
E968573492	1	KTR - REMOTE KEYBOARD (available only with Advanced control) ()
E968573497	1	KUSB - RS485/USB SERIAL CONVERTER (available only with Advanced control) ()

CONFIGURATION OF ADDITIONAL MODULE

Power supply	400V/3PH+N/50HZ
Installation	OUTDOOR
Filter	STANDARD

Supplied loose accessories additional MODULE

Code	Amount	Description
E968575293	1	Primo Avviamento (OBBLIGATORIO)

Dry-Pool DAHR-DRESY 118 - Release:20220119A

Rhoss Spa - Via Oltreferrovia,32 33033 Codroipo (UD) - Tel.0432911611 - Fax.0432911600 - email: rhoss@rhoss.it

Page 1 / 6

CTA Custom ADV and Next Air

Selection software

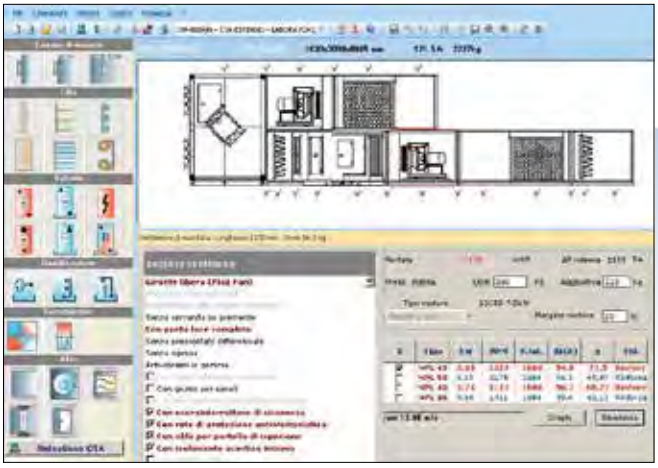

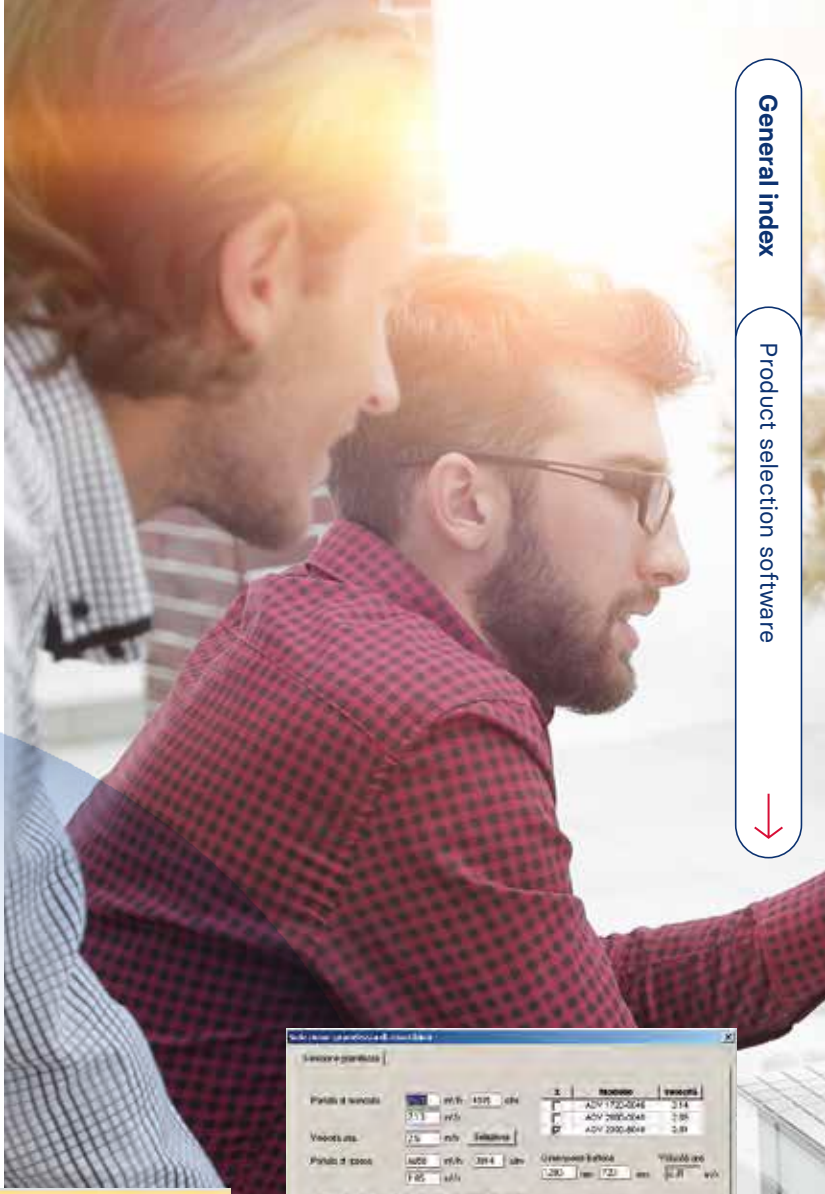

- The innovative selection software of the CTA ADV range allows fast and correct sizing of the units.

The program easily guides the user through the selection of the configuration, the components and accessories of the air handling units. The selection of each section can be customised by choosing from multiple accessories available.

- The software also has an automatic verification system of the input data that does not allow data, sections or accessories to be entered if incompatible with the calculation.

- The software provides professionals with a technical datasheet that includes a detailed description, a detailed drawing and an economic summary that is always updated.

- Each offer is archived in a database in order to apply any change and economic update at any time.

- The configuration obtained allows the order to be passed on directly to production, thereby significantly decreasing the supply times of the units.

- Moreover, it is also possible to receive a detailed Autocad drawing of the unit from our

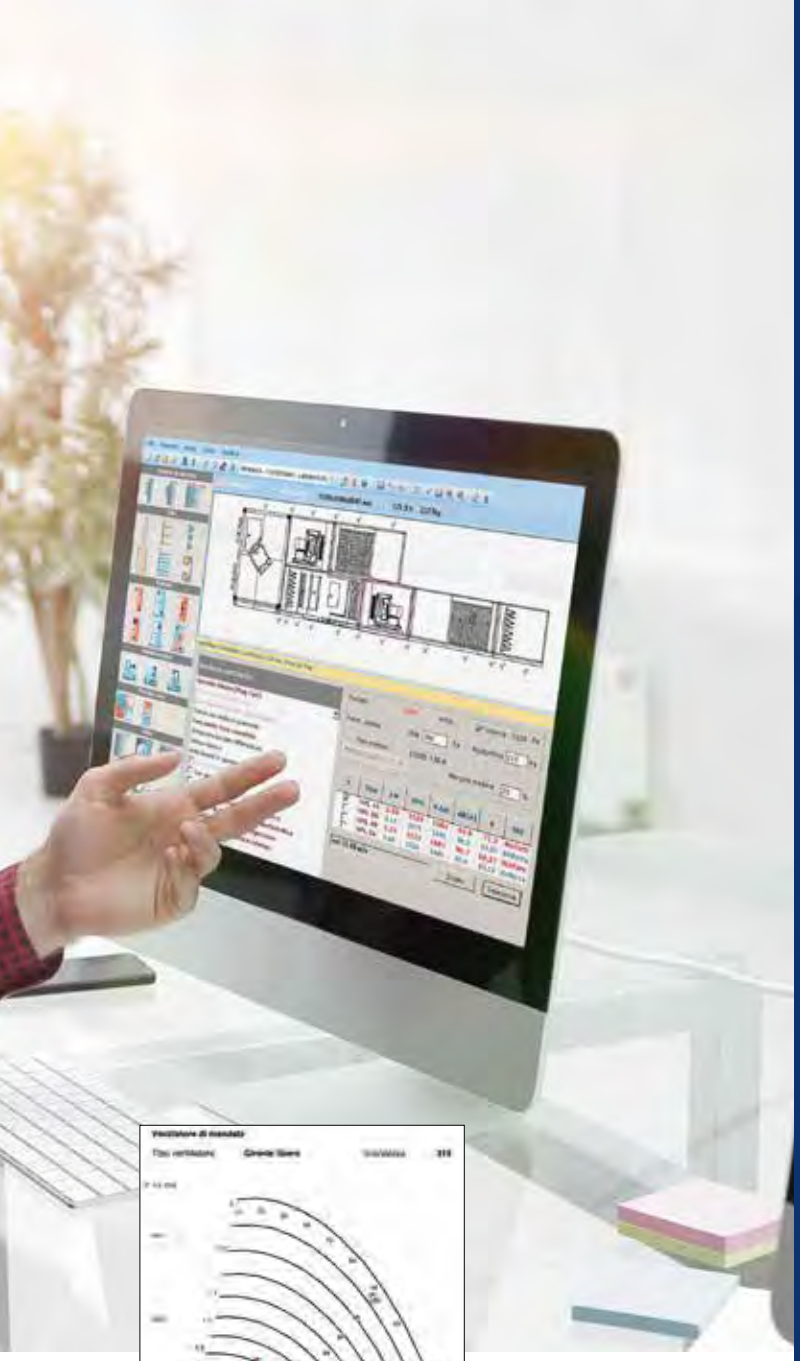

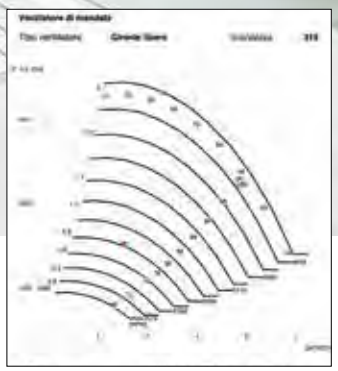

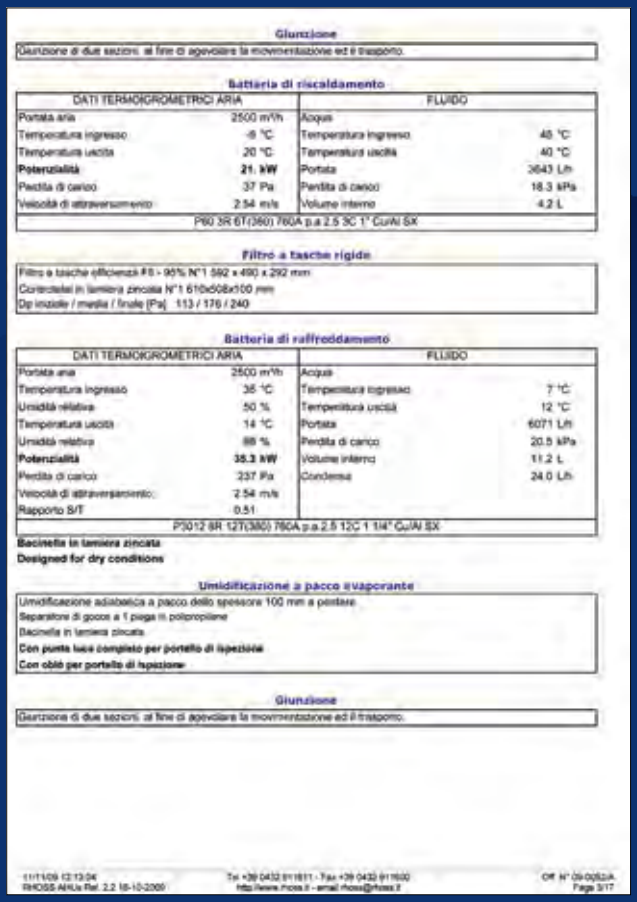

Giunzione

Giunzione di due sezioni al fine di agevolare la movimentazione ed il trasporto.

Batteria di riscaldamento

DATI TERMOIGROMETRICI ARIA		FLUIDO	
Portata aria	2500 m³/h	Acqua	
Temperatura ingresso	-8 °C	Temperatura ingresso	45 °C
Temperatura uscita	20 °C	Temperatura uscita	40 °C
Potenzialità	**21. kW**	Portata	3643 L/h
Perdita di carico	37 Pa	Perdita di carico	18.3 kPa
Velocità di attraversamento	2.54 m/s	Volume interno	4.2 L

P60 3R 6T(380) 760A p.a.2.5 3C 1" Cu/Al SX

Filtro a tasche rigide

Filtro a tasche efficienza F8 - 95% N°1 592 x 490 x 292 mm
Controtelai in lamiera zincata N°1 610x508x100 mm
Dp iniziale / media / finale [Pa] 113 / 176 / 240

Batteria di raffreddamento

DATI TERMOIGROMETRICI ARIA		FLUIDO	
Portata aria	2500 m³/h	Acqua	
Temperatura ingresso	35 °C	Temperatura ingresso	7 °C
Umidità relativa	50 %	Temperatura uscita	12 °C
Temperatura uscita	14 °C	Portata	6071 L/h
Umidità relativa	88 %	Perdita di carico	20.5 kPa
Potenzialità	**35.3 kW**	Volume interno	11.2 L
Perdita di carico	237 Pa	Condensa	24.0 L/h
Velocità di attraversamento	2.54 m/s		
Rapporto S/T	0.51		

P3012 6R 12T(380) 760A p.a.2.5 12C 1 1/4" Cu/Al SX

Bacinella in lamiera zincata
Designed for dry conditions

Umidificazione a pacco evaporante

Umidificazione adiabatica a pacco dello spessore 100 mm a pestare
Separatore di gocce a 1 piega in polipropilene
Bacinella in lamiera zincata
Con punta luce completo per portello di ispezione
Con oblò per portello di ispezione

Giunzione

Giunzione di due sezioni al fine di agevolare la movimentazione ed il trasporto.

11/11/09 12:12:04
RHOSS AHUs Rel. 2.2 16-10-2009
Tel. +39 0432 911611 - Fax +39 0432 911600
http://www.rhoss.it - email rhoss@rhoss.it
Off. N° 09-0052/A
Page 3/17

Technical Sales Department while the offer is being provided, which facilitates the designer when verifying the dimensional restrictions of the system and allows the drawing to be entered during the initial phases of the project.

- **Simple to install and use**
- **Flexible in selecting the RHOSS units for working conditions**
- **Effective and complete in useful results for the designer**

Rhoss Solutions

Rhoss Solutions

Indoor Air Quality Solutions

Air'Suite 282
Biocidal filtration

Ponente 1000 286
An innovative device for sanitisation
and purification based on Photocatalysis.

Variable flow rate systems solutions

VPF
Variable Primary Flow 290
The new plant engineering breakthrough

Biocidal filtration

A new way to treat the air in the confined spaces that we breathe every day.
A new concept of biocidal filtration that allows for the removal of microbiological contamination without requiring additional solutions to be installed or existing systems to be modified.

Healthy environment

Living in a "clean" environment is a concept closely linked to breathing clean air.
On average, each person inhales air 16,000 times a day, so breathing in a healthy environment allows for healthy living. But what does clean air mean? Healthy?
It means guaranteeing adequate thermo-hygrometric conditions, but mainly the absence of conditions that directly or indirectly affect our mental and physical state, such as odours and pathogens. In other words, a high standard of IAQ (Indoor Air Quality).

Today, indoors, this need is threatened by the intensification of external pollution (promiscuity of production areas, vehicle traffic, etc.) and increased air recirculation in environments where energy saving is strategic and/or where there is no easy availability of primary air.

Vehicle traffic

Production facilities

Biological contaminants

Unpleasant odours

- Inactivation of bioburden
- Minimum energy impact
- No additional maintenance
- Immediate retrofitting on existing systems
- Disposal without the risk of contamination

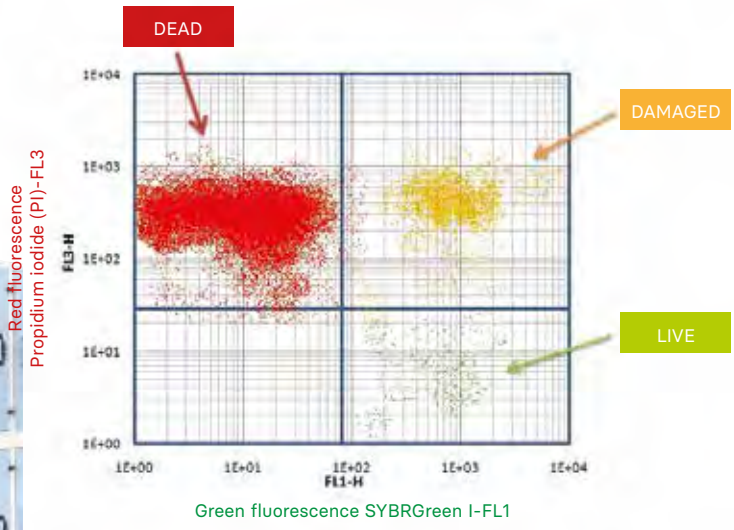

Biological removal efficiency of Air'Suite

Biocidal filtration

Biocidal filtration refers to a combination of granular filtration (conventional) and inactivation of the bioburden (innovative) on the same amount of air which passes through the same filtration medium.
This process has been achieved by using a new, appropriately functionalised bio-polymer, characterised by:
wide availability in nature;
biocompatibility;
non-toxicity;
intrinsic infection preventing properties.

Research, development and certifications

The Air'Suite® filters were tested with new, state-of-the-art techniques that measure the actual biocide capacity on the filter surface and that do not make use of cultures but count each organism/cell and its integrity or ability to reproduce.
The bacteria removal efficiency was then measured through a study protocol with IRSA-CNR certified flow cytometry techniques on a sample of the contaminated filter.
The resulting efficiencies are higher than 50% of "instant" reduction and 100% within 30 hours of contamination.

The ideal environment for installing Air'Suite®

HOSPITAL

Hospitals, clinics, nursing homes, outpatient clinic waiting rooms

OFFICE

Offices, meeting rooms and conference rooms

ENTERTAINMENT

Cinemas, theatres, shopping centres

Available types of filters

For fan coils

The flat Air'Suite® is a filter with filtering grade G2, pursuant to EN 779:2012 ISO Coarse 40% pursuant to EN ISO16890; it is available as an accessory for Yardy, Yardy-I, YardyDuct, Yardy-ID, and Yardy HP range versions with a cabinet, recessed and ductable (MVP-MXP-IVP-IVF-IXP-CXP).

Air'Suite® is supplied as an accessory already fitted in the unit or separately. In this case, the standard filter must simply be replaced.

Alternatively, duct installations are provided with a frame and filter that can be removed in any direction.

For air handling units

The Air'Suite® biocide filters are available in the following filtration grades:

- Cell filters: ISO COARSE 55% ISO 16890
- Rigid bag filters: ISO ePM1 50%, 70%, 85% ISO 16890.

HO.RE.CA.

Restaurants, bars, hotels

WELLNESS

Hot baths, spas, swimming pools, gyms

SCHOOL

Schools, universities

Ponente 1000

An innovative device for sanitisation and purification based on Photocatalysis.

Always attentive to the issues of air quality and at the forefront in the supply of equipment during the pandemic emergency. Rhoss extends its horizons and becomes the leading player of technological and health progress with the introduction of a latest generation device: the filter Ponente 1000.

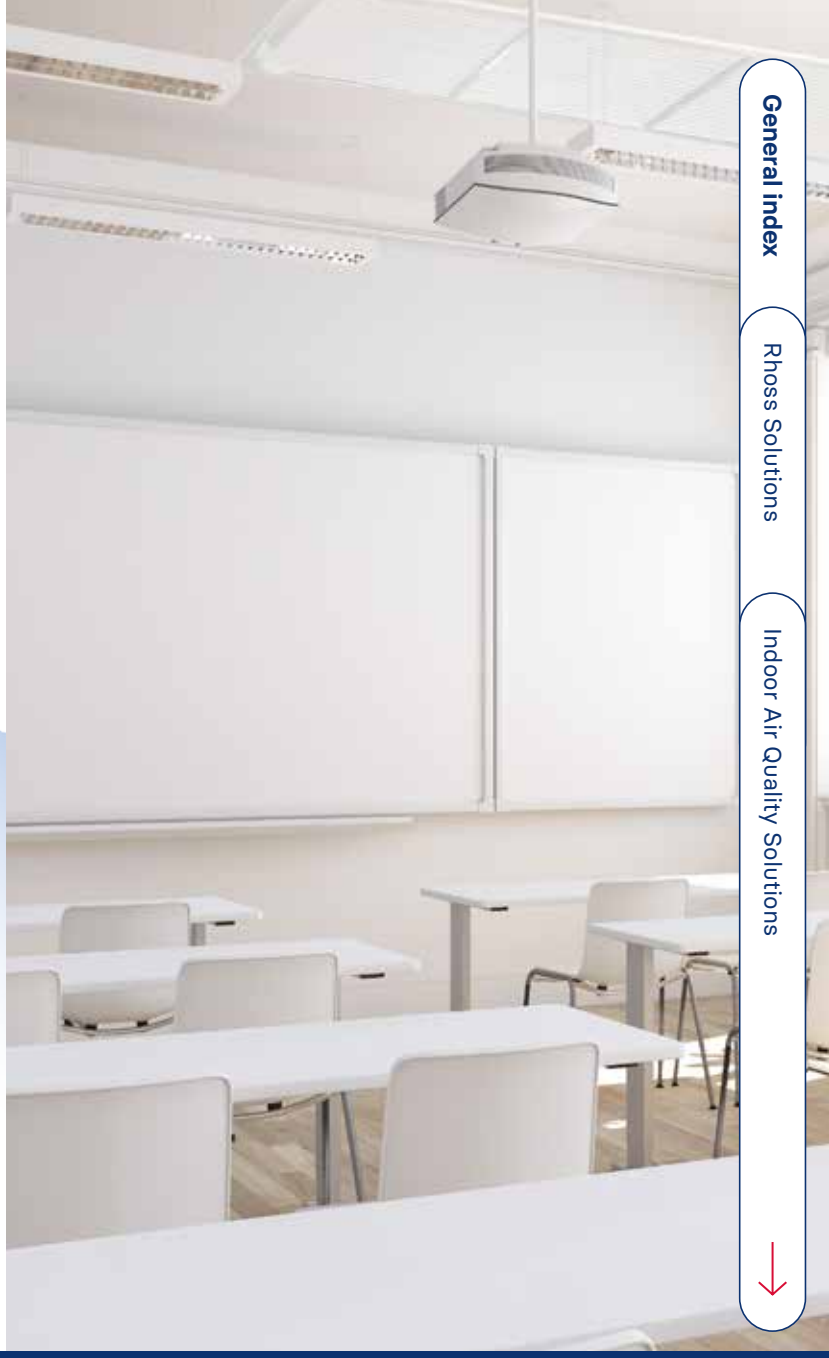

Eliminates 100% of the infectious load of SARS-Cov2 in 30 minutes.

RHOSS R EXCLUSIVE

Scientific research

It is an innovative device for the sanitisation and purification of the air intended for indoor rooms, based on the principle of photocatalysis. The joint action of the components sanitises the air, achieving the objectives of containing the transmission of Covid.

Health efficacy

Rapidly and effectively eliminates the main harmful substances present in the air and inactivates the infectious viral load of SARS-Cov-2 indoors: 98.2% in just 10 minutes up to 100 % in 30 minutes, with certified performance (results obtained in the laboratory).

A unique solution

Rhoss has concluded an exclusive agreement with NANOHUB, an innovative start-up established in 2018 with the objective of developing solutions based on the use of innovative nanomaterials for energy efficiency and for the quality of rooms.

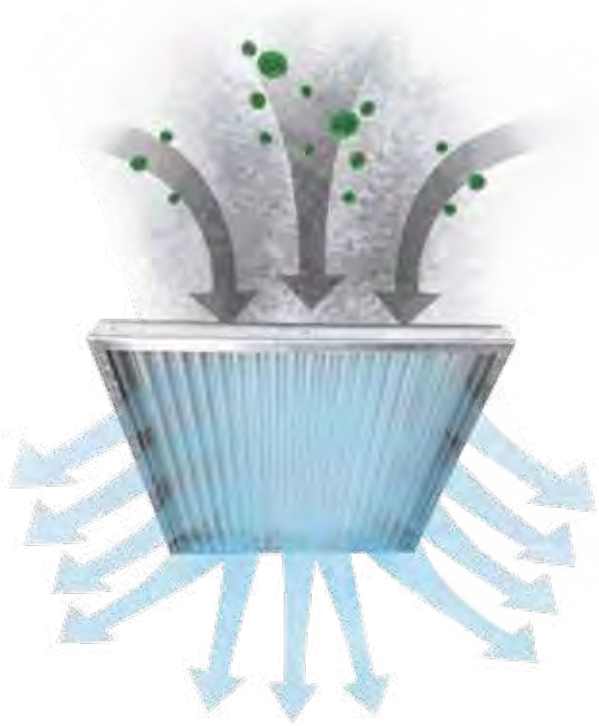

Stop to viruses, bacteria, VOC.

An exclusive patent, the result of scientific research

Effective against Covid-19

100% infectious load inactivation of the SARS-Cov-2 virus in 30 minutes. Eliminates bacteria, fungi, odours (results obtained in the laboratory).

Patented quality

Innovative and patented filtration system NANOHUB KtV®.

N·A·N·O HUB

Quick and automatic

Sanitising the air in the room in a few minutes with automatic activation.

Totally safe

100% safe for humans.
Inhalation safe, ozone free,
UV light free.

100% ecological

No emissions into the air.
No disposal material.
Very low operating costs.

No maintenance

The nano coating lasts forever.
Easy installation in any unit.

Exceptional purity levels with Custom ADV and ADV NEXT Air.

The application of the Ponente 1000 filter in combination with the Airsuite bactericidal filter in the Rhoss air handling units permits the indoor air quality to be raised to exceptional purity levels.

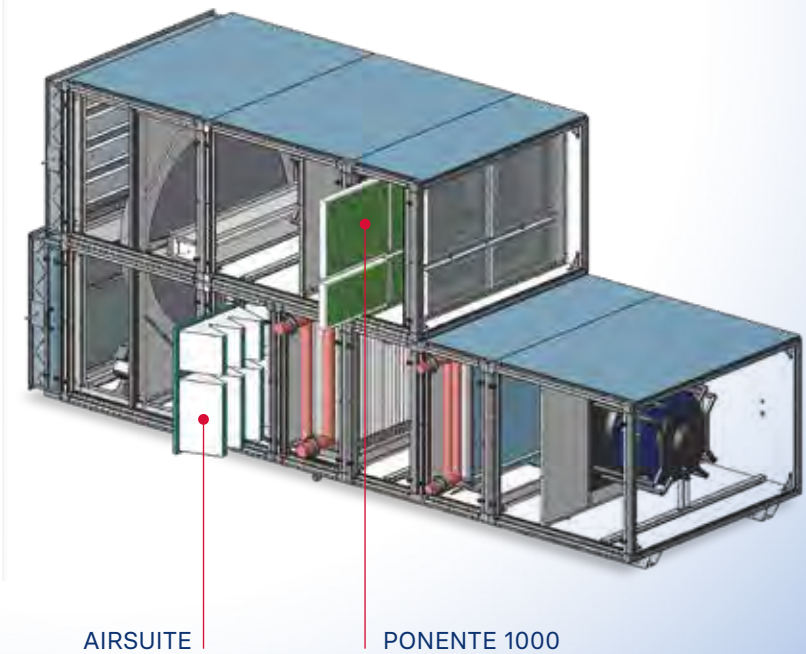

Rhoss' proposal is to position Ponente 1000 on the **return** section, with a dual advantage.

Sanitise the surface of the heat recovery

Purify the recirculated air

Prefilter

To ensure the sanitising properties of the PONENTE 1000 for years to come, installation of a downstream prefilter is recommended.

The ideal environment for installing Ponente 1000

Hospitals, clinics, nursing homes, outpatient clinic waiting rooms

Offices, meeting rooms and conference rooms

Cinemas, theatres, shopping centres

Perfect integration

It integrates perfectly into the architecture of the Rhoss air handling units of the **Custom ADV** and **ADV Next Air** Ranges due to its standard dimensions, in line with most of the filter cells available on the market.

ADV CUSTOM

ADV NEXT AIR

Restaurants, bars, hotels

Hot baths, spas, swimming pools, gyms

Schools, universities

VPF Variable Primary Flow

The new plant engineering breakthrough

Cooling systems with VPF (Variable Primary Flow), ideal for medium to large cooling capacities, are an interesting alternative to more conventional constant flow systems.

In fact, the solutions designed by Rhoss offer benefits like reduced pumping unit energy consumption with consequent cost savings, as well as reliability and simplified system control.

Using these systems contributes significantly to achieving more LEED building certification credits.

Variable flow systems

The Rhoss VPF solution can be summarised as follows:

The primary circuit pump or double pump is inverter-controlled to regulate the flow and thereby reduce pumping power [P= f (Q^3)].
The customer provides the inverter pump/ pumps to control the secondary one.

VPF testing in the Rhoss R&D Lab, regardless of the solution, has shown that the amount of water is important to stabilise operation and reduce how often the cooling unit turns ON/ OFF.

A primary side external tank (TANK) is recommended, connected to the unit, with a minimum volume of 5 l/kW or less if the Tank&Pump inside the unit is used.
Using 2-way "V2" valves for the terminals and a minimum number of 3-way "V3" valves is recommended to ensure a 20% minimum flow when the terminals are closed.
The set up for managing the variable flow rate, VPF_R, is supplied in many product ranges and indicated in the technical data sheets of this catalogue.

VPF solution by RHOSS

Download the complete document::
http://www.rhoss.com/it/download/depliant

Download the video:
http://www.rhoss.com/it/download/multimedia

VPF RHOSS - The most efficient solution for variable flow systems

Comparison of the Rhoss VPF system and other pumping systems, when the load required changes.

Annual savings are very high in terms of energy and costs, in the Mediterranean area as well as in Central European cities, which are applicable to 100 kW cooling units installed in systems running 24/7 (hospitals, hotels, etc.).

The table indicates another important fact: the equivalent area of the photovoltaic system required to produce the electrical kW/h saved by the Rhoss system. This index shows how effective the proposed solution is.

	Annual energy consumed for pumping	Rhoss system savings	Surface area of photovoltaic system required to achieve the same savings as with the Rhoss system
	[kW/h]	[kW/h]	[m²]
Primary constant flow and constant secondary	14.903	86%	81
Primary constant flow and variable secondary	7.472	71%	34
Conventional VPF system	5.442	60%	21
Rhoss VPF system	2.166		

* Example of comparative results for 100 kW cooling unit installed in the plant with a variable load operating 24 hours a day (hospitals, hotels, etc.) in the northern Italy and central Europe climatic area.

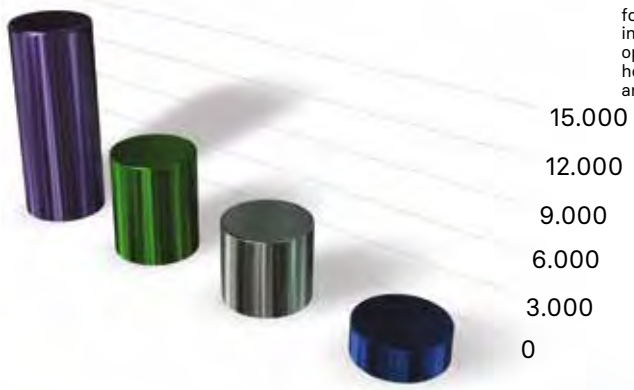

15.000
12.000
9.000
6.000
3.000
0

- Primary constant flow and constant secondary
- Primary constant flow and variable secondary
- Traditional VPF system
- Conventional VPF system

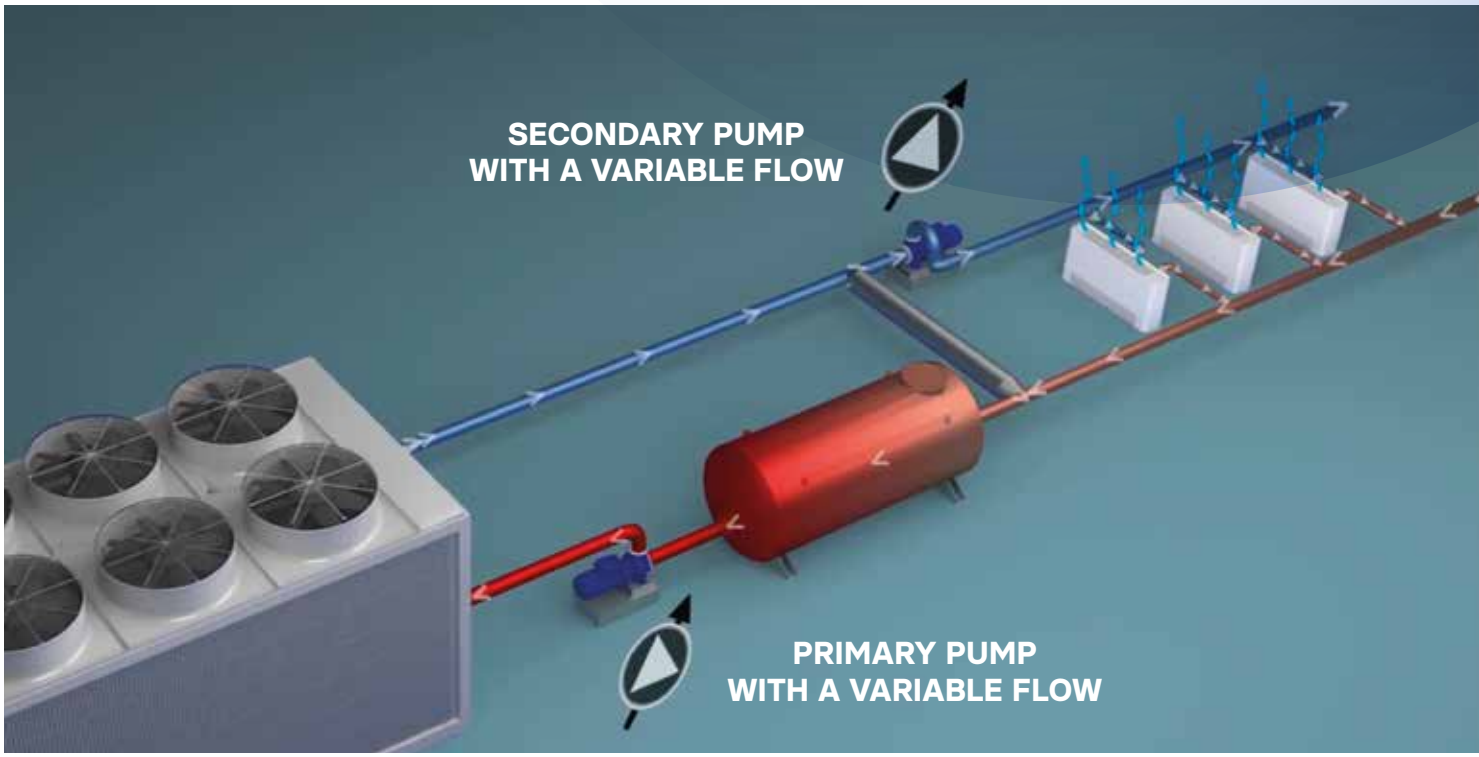

New air
for the future.

RHOSS S.P.A.
Via Oltre Ferrovia, 32
33033 Codroipo (UD) - Italy
tel. +39 0432 911611
rhoss@rhoss.com

Italy Sales Departments
Via Oltre Ferrovia, 32
33033 Codroipo (UD)
tel. +39 0432 911611

Via Venezia, 2 - p. 2
20834 Nova Milanese (MB)
tel. +39 039 6898394

RHOSS France
Bat. Cap Ouest - 19 Chemin de la Plaine
69390 Vourles - France
tel. +33 (0)4 81 65 14 06
rhossfr@rhoss.com

RHOSS Deutschland GmbH
Hölzlestraße 23, D
72336 Balingen, OT Engstlatt - Germany
tel. +49 (0)7433 260270
rhossde@rhoss.com

RHOSS Iberica Climatizacion, S.L.
Frederic Mompou, 3 - Pta. 6ª Dpcho. B 1
08960 Sant Just Desvern – Barcelona
tel. +34 691 498 827
rhossiberica@rhossiberica.com

rhoss.com

K17057EN ed.2 - 06.22

RHOSS S.P.A. declines all responsibility for possible mistakes in this document and reserves the right to alter the features of their products without notice.